MATERIAL SPECIFICATION

SR. NO	MATERIAL LIST	MATERIAL GRADE
1.	SHAFT	LASER ALIGNED IS 1367
2	WELDING	BS · 5135 OR EQUIVALENT

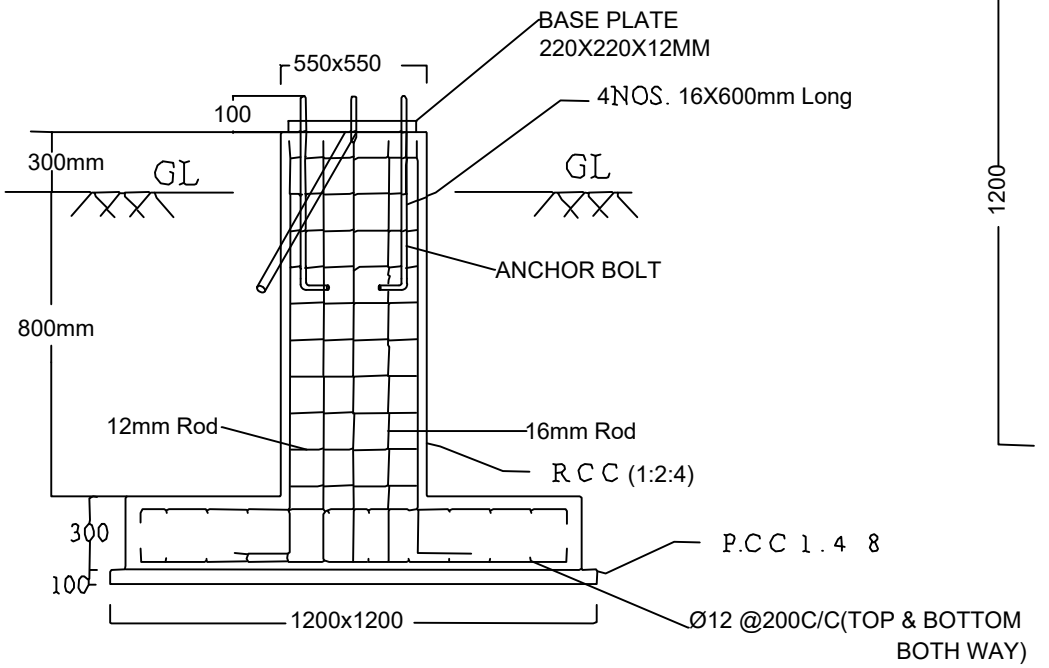

SECTIONAL ELEVATION

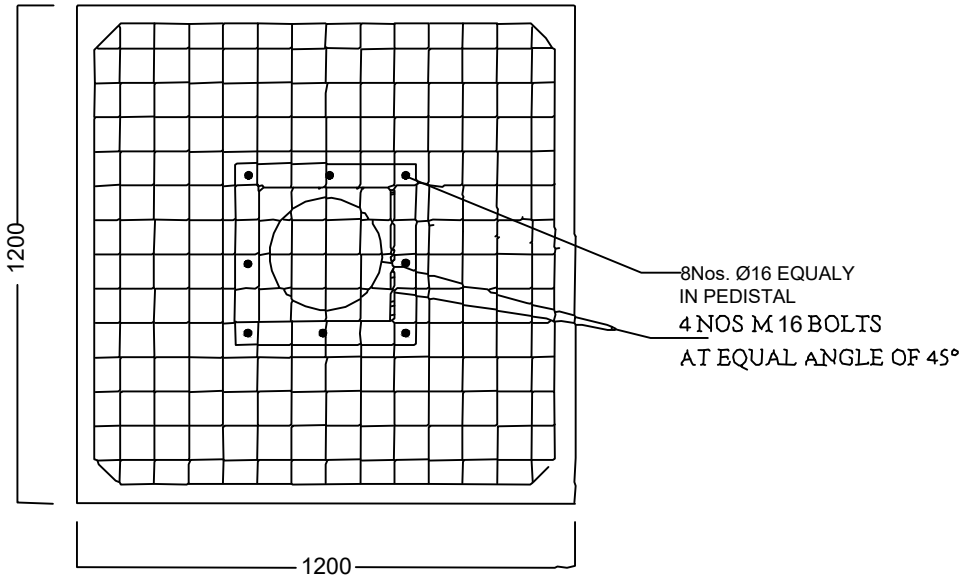

PLAN

FOUNDATION DRAWING OF 6 MTR POLE

NOTES:
1) ALL DIMENSIONS ARE IN MM.
2) MATERIAL GRADE AS PER IS 2062 PART I & II

KASPER	KASPER ENGINEERING GREATER NOIDA	
CLIENT		
DESIGN	B C	6 MTR POLE FOUNDATION DRW
DRN	S.B	
DRG NO -		