LIGHTING FIXTURE SCHEDULE

Type Mark	Manufacturer & Catalog Number	Mounting Type	Descriptions	Lamp
A	LITHONIA - #2FGG43L835-3-D-UNV	Recessed	2'X4' LED RECESSED DIRECT/INDIRECT FIXTURE	LED
B	LITHONIA - #2FGG30L835-2-D-UNV	Recessed	2'X2' LED RECESSED DIRECT/INDIRECT FIXTURE	LED
C	PHILIPS - #LBX55L835-UNV	Pendant	4' LED INDUSTRIAL FIXTURE	LED
D	CONTECH - #RL38IC235KCMVD	Recessed	4" LED DOWNLIGHT WITH SHOWER TRIM, WET LOCATION LISTED	LED
D1	CONTECT - #R4NC-3-35K-27-D	Recessed	4" LED DOWNLIGHT	20W 2000 Lumen White LED
D2	CONTECT - #R2RM-05-35K-MVD-M-NCF1	Recessed	2" LED RECESSED DOWNLIGHT	8W 800 Lumen White LED
E	DUAL LITE - #SE-X-R-BN-E-I	Universal	Cast Alumninum exit sign with red LED, universal arrows, self-testing, battery backup	LED
F	AXIS- #SLWLED-SL75/25-1000-80-35-S#-UNV-DP	Wall	LED SEMI-INDIRECT FIXTURE	1000 lumen per foot
F1	AXIS - #WBDIWLED-500/500/80-30-SO-SO-S#-C-277-DP-1	Wall	LED SEMI-INDIRECT FIXTURE WET LOCATION	1000 lumen per foot
G	SOLERA - ORB-14 BAR-11736-4000K-UNV	Pendant	LED LOW BAY	LED
H	AFX LIGHTING - # BLW5232800L30MVXX	WALL	BLAINE LED OUTDOOR SCONCE	28W LED
OA	MCGRAW-EDISON - #IST-AF-1200-LED-E1	Wall	LED WALL PACK	LED
OB	STONCO #LPW16-5	Wall	LED WALL PACK	LED
OD	EATON - #3002A-SQ-25LED3500-WFL-NSL-NSS-DIF-38	Recessed	Inground Lighting Fixture	LED
S1	RAB - #ALED3T150-Y-K POLE: PS4-07-25D2	Pole	LED Single Arrangement Provide appropriate pole attachment accessories	150W While LED
S2	RAB - #ALED3T150-Y-K 2 @ 180 POLE: PS4-07-25D2	Pole	LED Back-Back Arrangement Provide appropriate pole attachment accessories	(2) 150W White LED
S3	INSIGHT - #MX635KASYUEAS-X	Surface	Lighting fixture for signs	LED
S4	LSI - #XIG-LED-19-350-CW-UE-SP10	STANCHION	FLAG POLE LIGHT	LED

LIGHTING NOTES:
1. PROVIDE CORRECT TRIM FOR ALL FIXTURES INSTALLED IN A HARD CEILING OR SPECIALTY CEILING TYPE.
2. PROVIDE ALL APPROPRIATE MOUNTING HARDWARE. PROVIDE BACK/MOUNTING BOXES AS RECOMMENDED BY MANUFACTURER.
3. COORDINATE LOCATION OF ALL EXIT SIGNS IN THE FIELD WITH OWNER SUPPLIED EQUIPMENT, BULK HEADS AND SIGNAGE TO ENSURE VISIBILITY FROM AT LEAST HALFWAY TO NEXT SIGN OR TO THE EXIT.
4. PROVIDE DOUBLE OR SINGLE FACE EXIT SIGNS AS INDICATED ON THE DRAWINGS. PROVIDE ARROWS AS INDICATED.
5. ALL FIXTURE FINISHES AND DECORATIVE DETAILS SHALL BE SELECTED BY THE ARCHITECT PRIOR TO FINAL ORDER. COLORS SHALL BE SELECTED FROM FULL COLOR LINE (BOTH STANDARD, CUSTOM, AND PREMIUM).
6. FIXTURES INDICATED ARE THE BASIS OF DESIGN. ALL EQUALS SHALL HAVE THE SAME PERFORMANCE AND GENERAL SHAPE AND OPTIONS. ALL EQUALS ARE TO BE APPROVED BY THE ARCHITECT AND ENGINEER PRIOR TO ORDERING.
7. ALL FIXTURES CONNECTED TO A DIMMER SHALL HAVE DRIVER THAT COORDINATES WITH CONTROLLER. COORDINATE BEFORE ORDERING.

GENERAL NOTES:
1. CONTRACTOR SHALL PROVIDE BRANCH CIRCUIT WIRING TO ALL ITEMS WHICH REQUIRE ELECTRICAL CONNECTIONS. WHERE BRANCH CIRCUIT WIRING IS NOT SHOWN, CONTRACTOR SHALL CONNECT ITEMS TO THE CIRCUITS INDICATED. EXACT ROUTING OF CONDUITS AND WIRING SHALL BE DETERMINED BY THE CONTRACTOR IN ACCORDANCE WITH THE NATIONAL ELECTRICAL CODE AND SPECIFICATIONS.
2. CONTRACTOR SHALL USE ONLY THOSE WIRING METHODS ALLOWED IN THE SPECIFICATIONS.
3. A MAXIMUM OF 3 CIRCUITS SHALL BE RUN IN ONE CONDUIT, CIRCUITS MUST BE ON SEPARATE PHASES. CIRCUITS SHALL NOT SHARE A COMMON NEUTRAL.
4. MINIMUM WIRE SIZE SHALL BE #12AWG. MINIMUM CONDUIT SIZE SHALL BE 3/4".
5. THE ELECTRICAL CONTRACTOR SHALL CHECK AND VERIFY ALL DIMENSIONS AND CONDITIONS AT THE SITE.
6. ALLOW CLEAR SPACE IN FRONT OF ALL PANELBOARDS, SWITCHBOARDS, ELECTRICAL EQUIPMENT, ETC., AS REQUIRED BY NEC.
7. COORDINATE EXACT LOCATION OF LIGHTING FIXTURES WITH HVAC DUCTWORK, PIPING AND EQUIPMENT.
8. ALL LIGHTING FIXTURES TO BE COMPATIBLE WITH THE CEILING CONSTRUCTION.
9. ELECTRICAL CONTRACTOR TO SUPPLY ALL GROUNDING & BONDING REQUIREMENTS PER NEC.

ELECTRICAL DRAWING LIST

E0.0	ELECTRICAL INFORMATION SHEET
E0.5	SITE PLAN - ELECTRICAL
E0.6	SITE ELECTRICAL DETAILS
E0.7	SITE ELECTRICAL DETAILS
E1.0	FIRST FLOOR PLAN - UNIT A - POWER
E1.1	FIRST FLOOR PLAN - UNIT B - POWER
E1.2	FIRST FLOOR PLAN - UNIT C - POWER
E2.0	FIRST FLOOR PLAN - UNIT A - LIGHTING
E2.1	FIRST FLOOR PLAN - UNIT B - LIGHTING
E2.2	FIRST FLOOR PLAN - UNIT C - LIGHTING
E3.0	ROOF PLAN - POWER
E4.0	ELECTRICAL DETAILS
E4.1	ELECTRICAL DETAILS
E5.0	ELECTRICAL RISER & SCHEDULES
E5.1	ELECTRICAL SCHEDULES
E5.2	ELECTRICAL SCHEDULES
E5.3	ELECTRICAL SCHEDULES

CONTROL EQUIPMENT	
$M	MANUAL MOTOR STARTER - OVERLOADS SIZED TO ACCOMMODATE MOTOR - 4'-0" AFF UNLESS OTHERWISE NOTED
FVNR/SIZE1/3R	COMBINATION MOTOR STARTER - TYPE/SIZE/NEMA ENCLOSURE AS INDICATED - MOUNT 4'-6" AFF TO CENTERLINE OF OPERATING HANDLE PROVIDE OVERCURRENT AND OVERLOADS IN ACCORDANCE WITH MANUFACTURERS RECOMMENDATIONS FOR MOTOR HP
M	MOTOR - HORSEPOWER AS INDICATED
30/3/NF/12	DISCONNECT SWITCH - AMPS/POLES/FUSES/NEMA ENCLOSURE AS INDICATED - MOUNT 4'-6" AFF TO CENTERLINE OF OPERATING HANDLE
T	TRANSFORMER

STANDARD MOUNTING HEIGHTS		
9" BELOW FINISHED CEILING		WALL-MOUNTED CLOCKS, PROGRAM BELLS, (OR AS SHOWN ON ARCHITECTURAL DETAIL)
6" ABOVE DOOR		NURSE CALL DOME LIGHT
6" ABOVE FIRE HOUSE CABINET		RED SIGNAL LIGHT
10'-0"		BATTERY LIGHTING UNITS AND REMOTE WALL MOUNTED LIGHT HEADS (OR 1'-0" BELOW FINISHED CEILING OF TOP UNIT).
8'-6"		PENDANT-HUNG INDUSTRIAL AND STRIP LIGHTING FIXTURES.
7'-8"+		TELEVISION OUTLET AND SERVICE RECEPTACLE-FOR SHELF MOUNTED T.V. IN BEDROOMS.
7'-6"	F	OR 6" BELOW FINISHED CEILING, WHICHEVER IS LOWER.
CENTER ABOVE DOOR OR WINDOW OPENING		WARNING AND SIGNALING FIXTURES/SIGNS.
6'-8"	F F	OR 6" BELOW FINISHED CEILING WHICHEVER IS LOWER. FIRE ALARM SIGNAL DEVICES AND ILLUMINATED FIRE SIGNALS.
6'-6"		TOP OF FLUSH AND SURFACE MOUNTED ELECTRICAL LIGHTING OR POWER PANELBOARDS AND TELEPHONE CABINETS.
6'-3"		TOP OF BACK-MOUNTED WALL EXIT FIXTURES (NOT MOUNTED ABOVE DOORS).
6'-0"		TOP OF HIGHEST ELECTRICAL SAFETY DISCONNECT SWITCHES, MAGNETIC STARTERS, CONTACTORS.
4'-6"		CENTERLINE OF OPERATING HANDLE FOR WALL MOUNTED DISCONNECT SWITCHES AND MOTOR STARTERS; WALL MOUNTED TELEPHONE AND PAY STATIONS (3'-6" AT HANDICAP LOCATIONS VERIFY EXACT HEIGHT PRIOR TO ROUGH IN)
3'-8"	CT $ $M W	WALL PHONE, ELECTRICAL DEVICE LIGHTING SWITCHES, MANUAL MOTOR STARTERS, SECURITY CARD, AND GFI RECEPTACLES IN TOILET ROOMS OR FOR SEPERATE SINKS NOT IN CASEWORK.
3'-6"	M	FIRE ALARM PULL STATIONS
2'-0"		ELECTRICAL RECEPTACLES WITHIN MECHANICAL SPACES, ELECTRICAL AND ELEVATOR ROOMS.
1'-6"	#	ELECTRICAL RECEPTACLES, TELEPHONE OUTLETS, DATA OUTLETS, TELEPHONE/DATA OUTLETS
0"		FINISHED FLOOR

MOUNTING HEIGHT NOTES:
1. MOUNTING HEIGHTS TO CENTER OF OUTLETS UNLESS OTHERWISE NOTED. IN MASONRY CONSTRUCTION THE ABOVE MOUNTING HEIGHTS SHALL BE USED FOR REFERENCE TO NEAREST BLOCK OF BRICK COURSING.
2. THE ABOVE MOUNTING HEIGHTS SHALL BE ADHERED TO UNLESS SPECIFICALLY NOTED OR DETAILED OTHERWISE ON THE DRAWING OR SPECIFICATIONS.
3. A '+' BESIDE A DEVICE INDICATES THAT DEVICE IS MOUNTED ABOVE A COUNTER OR CASEWORK. COORDINATE WITH ARCHITECTURAL ROOM ELEVATIONS, DETAILS AND CASEWORK CONTRACTOR.

THE ELECTRICAL SYSTEMS PRESENTED ON THE SUBSEQUENT DRAWINGS WERE DESIGNED IN ACCORDANCE WITH THE FOLLOWING APPLICABLE CODES AND STANDARDS:

- THE NATIONAL ELECTRICAL CODE (NEC) 2014
- INTERNATIONAL BUILDING CODE (IBC) 2015
- INTERNATIONAL ENERGY CONSERVATION CODE (IECC) 2015
- ASHRAE STANDARD 90.1

SITE WORK	
E	UNDERGROUND ELECTRIC LINE
T	UNDERGROUND TELEPHONE LINE
AE	AERIAL ELECTRIC LINE
AT	AERIAL TELEPHONE LINE
G	BURIED GROUND CONDUCTOR - #4/0 BARE COPPER UNLESS OTHERWISE NOTED
	UTILITY POLE
	POLE MOUNTED AREA LIGHTING FIXTURE
MH	MANHOLE
	GROUND ROD

SIGNAL SYSTEM	
S	SMOKE DETECTOR
C	CARBON MONOXIDE DETECTOR
H	HEAT DETECTOR
DH	DOOR HOLDER
M	MANUAL PULL STATION - SHALL BE MOUNTED SUCH THAT THE HANDLE IS NOT LESS THAN 42" AND NOT GREATER THAN 54" AFF.
F	AUDIO ALARM - SHALL BE MOUNTED WITH THEIR TOPS AFF AT HEIGHTS OF NOT LESS 90" AFF
F	AUDIO/VISUAL ALARM - SHALL BE MOUNTED SUCH THAT ENTIRE LENS IN NOT LESS THAN 80" AND NOT GREATER THAN 96" AFF.
F	VISUAL ALARM - SHALL BE MOUNTED SUCH THAT ENTIRE LENS IS NOT LESS THAN 80" AND NOT GREATER THAN 96" AFF.

ABBREVIATIONS & SYMBOLS	
AFF	ABOVE FINISHED FLOOR
AFG	ABOVE FINISHED GRADE
ATS	AUTOMATIC TRANSFER SWITCH
CT	COUNTER HEIGHT-44" AFF (UNLESS OTHERWISE NOTED)
DC	DUCT COIL
DF	DRINKING FOUNTAIN
EC	ELECTRICAL CONTRACTOR
EF	EXHAUST FAN
GC	GENERAL CONTRACTOR
GF	GROUND FAULT INTERRUPTER
HC	HVAC CONTRACTOR
HP	HEAT PUMP
KES	KITCHEN EQUIPMENT SUPPLIER
MW	MICROWAVE
PC	PLUMBING CONTRACTOR
TVSS	TRANSIENT VOLTAGE SURGE SUPPRESSER
WM	WALL MOUNTED
WP	WEATHERPROOF
1	DRAWING NOTE BY SYMBOL

PANELBOARDS	
	SURFACE MOUNTED PANEL
	FLUSH MOUNTED PANEL

CIRCUITING	
JB	JUNCTION BOX
ROOM NAME ROOM # P-1	BRANCH CIRCUIT NUMBER FOR ALL ITEMS IN THIS ROOM UNLESS OTHERWISE INDICATED - (*) INDICATES CONNECTION TO CIRCUIT NUMBER SHOWN NEXT TO DEVICE

LIGHTING	
	2'x2' FLUORESCENT LIGHTING FIXTURE
	2'x4' FLUORESCENT LIGHTING FIXTURE
	2'x4' FLUORESCENT LIGHTING FIXTURE-EMERGENCY
	1'x8' FLUORESCENT LIGHTING FIXTURE
	2'x8' FLUORESCENT LIGHTING FIXTURE
	1'x4' FLUORESCENT LIGHTING FIXTURE
	6"X4' FLUORESCENT LIGHTING FIXTURE
	6"x2' FLUORESCENT LIGHTING FIXTURE
	WALL PACK LIGHTING FIXTURE
	FLUORESCENT STRIP LIGHT
	WALL WASHER FIXTURE
	ROUND RECESSED DOWNLIGHT FIXTURE
	NORMAL EMERGENCY FIXTURE
	EMERGENCY BATTERY UNIT
	REMOTE HEAD
	EXIT SIGN-DOUBLE FACE
	EXIT SIGN-CEILING MOUNTED WITH DIRECTIONAL ARROWS
	EXIT SIGN-SINGLE FACE
	WALL SCONCE

WIRING DEVICES	
$	SINGLE POLE SWITCH - 3'-10" AFF UNLESS OTHERWISE NOTED
$3	3-WAY SWITCH - 3'-10" AFF UNLESS OTHERWISE NOTED
$4	4-WAY SWITCH - 3'-10" AFF UNLESS OTHERWISE NOTED
$K	KEY SWITCH - 3'-10" AFF UNLESS OTHERWISE NOTED
$T5	SPRING WOUND TIME SWITCH, 5-MINUTE MAXIMUM DURATION - 3'-10" AFF UNLESS OTHERWISE NOTED
$T	SPRING WOUND TIME SWITCH, 1-HOUR MAXIMUM DURATION - 3'-10" AFF UNLESS OTHERWISE NOTED
$D	DIMMER SWITCH - 3'-10" AFF UNLESS OTHERWISE NOTED
$M	MANUAL MOTOR STARTER SWITCH - 3'-10" AFF UNLESS OTHERWISE NOTED
$3D	3-WAY DIMMER SWITCH - 3'-10" AFF UNLESS OTHERWISE NOTED
$OS	OCCUPANCY SENSOR SWITCH - 3'-10" AFF UNLESS OTHERWISE NOTED
$P	PILOT LIGHT SWITCH - 3'-10" AFF UNLESS OTHERWISE NOTED
$MO	MANUAL OVERRIDE - LEVITON #1256
	DUPLEX RECEPTACLE - NEMA 5-20R, MOUNT 1'-6" AFF UNLESS OTHERWISE NOTED
CT	COUNTER TOP DUPLEX RECEPTACLE
T	TAMPERPROOF DUPLEX RECEPTACLE - NEMA 5-20R, MOUNT 1'-6" AFF UNLESS OTHERWISE NOTED
	SINGLE RECEPTACLE - MOUNT 1'-6" AFF UNLESS OTHERWISE NOTED
	GFI DUPLEX RECEPTACLE
	QUAD RECEPTACLE - NEMA 5-20R, MOUNT 1'-6" AFF UNLESS OTHERWISE NOTED
	SPECIAL RECEPTACLE - MOUNT 30" AFF UNLESS OTHERWISE NOTED
	FLOOR BOX MOUNTED DUPLEX RECEPTACLE
FB	COMBINATION POWER/COMMUNICATIONS FLOOR BOX-DEVICES AS INDICATED
	MOTION DETECTOR
OS	ULTRASONIC OCCUPANCY SENSOR - 360°
DS	DAYLIGHT SENSOR - AUTOMATIC STANDALONE DAYLIGHT DIMMING CONTROLLER FOR LIGHTS ON ADJACENT
CS	CORNER SENSOR FOR CLASSROOMS CONNECTED TO THE LIGHTING CONTROL SYSTEM
$LC	MULTIPLE BUTTON DIGITAL CONTROL STATION WITH ON/OFF - 3'-10"AFF UNLESS OTHERWISE NOTED - 5 BUTTON IN CLASSROOMS AND COMMON AREAS, 3 BUTTON IN OFFICES.
$ Dos	DIMMER AND OCCUPANCY SENSOR SWITCH - 3'-10" AFF
CR	CARD READER - REMOTE EXTERIOR LOCATIONS - PROVIDE SQUARE BOX ; REMOTE INTERIOR LOCATION - PROVIDE SINGLE BACK BOX . ALL LOCATION - EXTEND 1"C WITH APPROPRIATE WIRING TO NEAREST DOOR HARDWARE INTERFACE. COORDINATE LOCATIONS IN THE FIELD

Professional Certification. I hereby certify that these documents were prepared or approved by me, and that I am a duly licensed Professional Engineer under the laws of the State of Maryland. License No. 49693, Expiration Date: 2020-07-24.

STATE OF MARYLAND · KATHRYN PARFITT · 49693 · PROFESSIONAL ENGINEER

ALL REPORTS, PLANS SPECIFICATIONS AND COMPUTER FILES RELATING TO THIS PROJECT ARE THE PROPERTY OF CRABTREE, ROHRBAUGH & ASSOCIATES. CRABTREE ROHRBAUGH & ASSOCIATES RETAINS ALL COMMON LAW, STATUTE AND OTHER RESERVED RIGHTS INCLUDING THE COPYRIGHT THERETO. REPRODUCTION OF THE MATERIAL HERIN OR SUBSTANTIAL USE WITHOUT WRITTEN PERMISSION OF CRABTREE, ROHRBAUGH & ASSOCIATES VIOLATES THE COPYRIGHT LAWS OF THE UNITED STATES AND WILL BE SUBJECT TO LEGAL PROSECUTION.
© CRABTREE, ROHRBAUGH & ASSOCIATES, INC 2019

REVISIONS

#	MM-DD-YR	NAME	DESCRIPTION OF CHANGES

CRABTREE ROHRBAUGH & ASSOCIATES - ARCHITECTS
100 WEST ROAD, SUITE 402, TOWSON MD 21204 410-528-0272
www.cra-architects.com
MECHANICSBURG, PENNSYLVANIA CHARLOTTESVILLE, VIRGINIA WHITE SULPHUR SPRINGS, WEST VIRGINIA

PROPOSED NEW
WASHINGTON COUNTY PUBLIC SAFETY TRAINING CENTER
WASHINGTON COUNTY PROJECT NO. 28-266
18350 PUBLIC SAFETY PLACE
HAGERSTOWN, MD 21740

ELECTRICAL INFORMATION SHEET

PLOT SCALE: AS INDICATED

FILENAME:

DATE: December 18, 2019

PROJECT 3089

E0.0

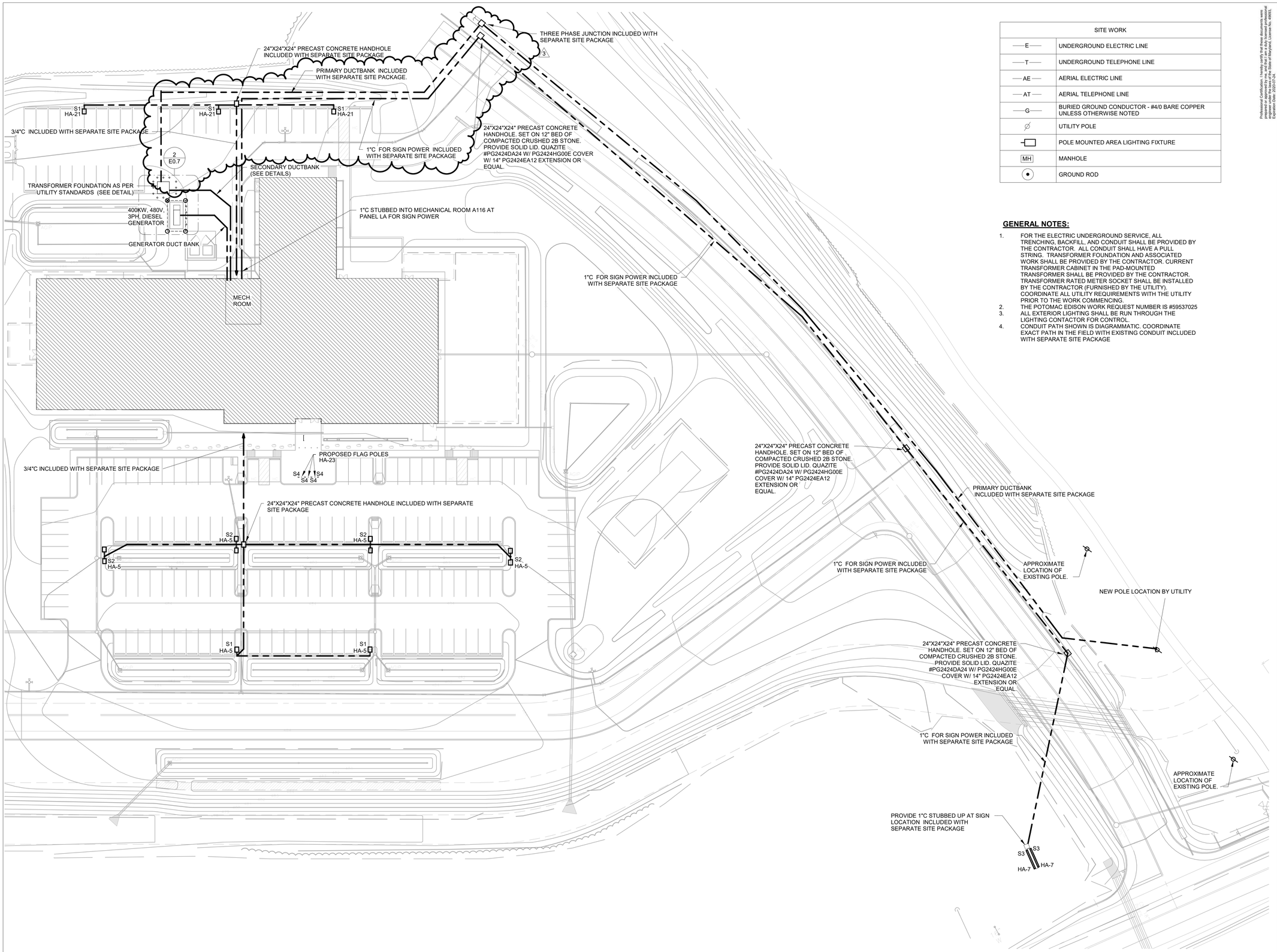

SITE PLAN - ELECTRICAL

SCALE: 1/32" = 1'-0"

SITE WORK	
—E—	UNDERGROUND ELECTRIC LINE
—T—	UNDERGROUND TELEPHONE LINE
—AE—	AERIAL ELECTRIC LINE
—AT—	AERIAL TELEPHONE LINE
—G—	BURIED GROUND CONDUCTOR - #4/0 BARE COPPER UNLESS OTHERWISE NOTED
∅	UTILITY POLE
	POLE MOUNTED AREA LIGHTING FIXTURE
MH	MANHOLE
●	GROUND ROD

GENERAL NOTES:

1. FOR THE ELECTRIC UNDERGROUND SERVICE, ALL TRENCHING, BACKFILL, AND CONDUIT SHALL BE PROVIDED BY THE CONTRACTOR. ALL CONDUIT SHALL HAVE A PULL STRING. TRANSFORMER FOUNDATION AND ASSOCIATED WORK SHALL BE PROVIDED BY THE CONTRACTOR. CURRENT TRANSFORMER CABINET IN THE PAD-MOUNTED TRANSFORMER SHALL BE PROVIDED BY THE CONTRACTOR. TRANSFORMER RATED METER SOCKET SHALL BE INSTALLED BY THE CONTRACTOR (FURNISHED BY THE UTILITY). COORDINATE ALL UTILITY REQUIREMENTS WITH THE UTILITY PRIOR TO THE WORK COMMENCING.
2. THE POTOMAC EDISON WORK REQUEST NUMBER IS #59537025
3. ALL EXTERIOR LIGHTING SHALL BE RUN THROUGH THE LIGHTING CONTACTOR FOR CONTROL.
4. CONDUIT PATH SHOWN IS DIAGRAMMATIC. COORDINATE EXACT PATH IN THE FIELD WITH EXISTING CONDUIT INCLUDED WITH SEPARATE SITE PACKAGE

Professional Certification. I hereby certify that these documents were prepared or approved by me, and that I am a duly licensed professional engineer under the laws of the State of Maryland. License No. 49693, Expiration Date: 2020-07-24.

STATE OF MARYLAND · KATHRYN PARFITT · 49693 · PROFESSIONAL ENGINEER

est. 1776

ALL REPORTS, PLANS SPECIFICATIONS AND COMPUTER FILES RELATING TO THIS PROJECT ARE THE PROPERTY OF CRABTREE, ROHRBAUGH & ASSOCIATES. CRABTREE ROHRBAUGH & ASSOCIATES RETAINS ALL COMMON LAW, STATUTE AND OTHER RESERVED RIGHTS INCLUDING THE COPYRIGHT THERETO. REPRODUCTION OF THE MATERIAL HERIN OR SUBSTANTIAL USE WITHOUT WRITTEN PERMISSION OF CRABTREE, ROHRBAUGH & ASSOCIATES VIOLATES THE COPYRIGHT LAWS OF THE UNITED STATES AND WILL BE SUBJECT TO LEGAL PROSECUTION.
© CRABTREE, ROHRBAUGH & ASSOCIATES, INC 2019

REVISIONS

#	MM-DD-YR	NAME	DESCRIPTION OF CHANGES
3	09/11/20	BIA	ADDENDUM 6

CRABTREE ROHRBAUGH & ASSOCIATES - ARCHITECTS
100 WEST ROAD, SUITE 402, TOWSON MD 21204 410-528-0272
www.cra-architects.com
MECHANICSBURG, PENNSYLVANIA CHARLOTTESVILLE, VIRGINIA WHITE SULPHUR SPRINGS, WEST VIRGINIA

PROPOSED NEW
WASHINGTON COUNTY PUBLIC SAFETY TRAINING CENTER
WASHINGTON COUNTY PROJECT NO. 28-266
18350 PUBLIC SAFETY PLACE
HAGERSTOWN, MD 21740

CR

SITE PLAN - ELECTRICAL

PLOT SCALE: As indicated

FILENAME:

DATE: December 18, 2019

PROJECT 3089

E0.5

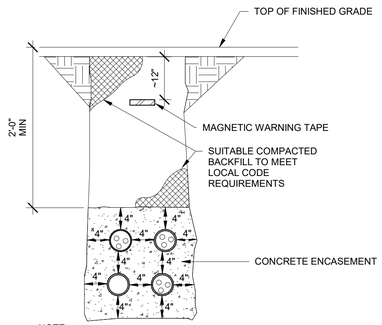

NOTE:
ELECTRICAL CONTRACTOR IS RESPONSIBLE FOR CONDUIT, CONCRETE, TRENCHING , AND BACKFILL.
PROVIDE 4" CONDUITS. PROVIDE PULL STRINGS IN SPARE CONDUIT

SECONDARY SERVICE DUCT BANK DETAIL

NO SCALE

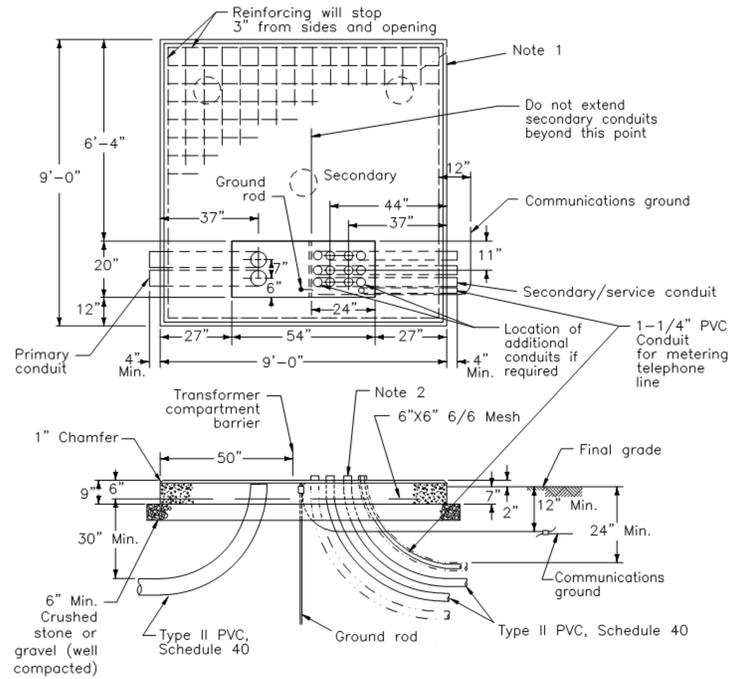

NOTES:
1. CONCRETE PAD MOUNTED TRANSFORMER.
2. SECONDARY CONDUITS SHALL NOT EXTEND MORE THAN 2 INCHES (MAXIMUM) ABOVE THE TOP OF FOUNDATION. PRIMARY CONDUITS SHALL BE CUT OFF 2 INCHES BELOW THE TOP OF FOUNDATION TO ALLOW FOR TERMINATING THE CABLES.
3. CONTRACTOR SHALL PROVIDE (1) 5/8" DIAMETER X 8' GROUND ROD, GROUNDING CONNECTIONS, AND #6 AWG COPPER COMMUNICATIONS GROUND WIRE (MINIMUM LENGTH OF WIRE REQUIRED - 7-1/2').
4. EXTEND 1-1/4" CONDUIT TO LOCATION AT BUILDING WHERE TELEPHONE LINE SERVICE CAN BE MADE AVAILABLE AT THE TELEPHONE DEMARCATION POINT.
5. CONTRACTOR SHALL CONTACT THE COMPANY PRIOR TO BEGINNING WORK TO DISCUSS THE DETAILS OF TRANSFORMER FOUNDATION POSITION AND ORIENTATION, WORKING CLEARANCES, BARRIER PROTECTION, CONSTRUCTION SPECIFICATIONS, AND INSPECTION PROCEDURES. THE CUSTOMER IS RESPONSIBLE FOR INSTALLING, OWNING, AND MAINTAINING THE TRANSFORMER FOUNDATION. THE CONTRACTOR SHALL PROVIDE A CLEAR AND FIRM APPROACH TO THE TRANSFORMER FOUNDATION AND KEEP THE AREA ABOVE THE TRANSFORMER CLEAR OF OBSTRUCTIONS THAT MAY BLOCK THE USE OF COMPANY VEHICLES (E.G., CRANE ACCESS TO THE TRANSFORMER).
6. INSTALL ALL CONDUITS BEFORE PLACING PAD. CONDUITS SHOULD NOT BE PLACED UNDER SECTIONS OF PAD SUPPORTING TRANSFORMER SO THAT ORIGINAL GROUND WILL NOT BE DISTURBED.
7. CONDUIT SHALL BE RIGID TYPE II PVC, SCHEDULE 40 PVC.
8. BACKFILL SHALL BE CLEAN GRANULAR SOIL, FREE OF LARGE STONES AND PERISHABLE MATERIAL. ALL BACKFILL SHALL BE SPREAD AND COMPACTED IN MAXIMUM LAYERS OF 8 INCHES.
9. THOROUGHLY COMPACT BASE CRUSHED STONE OR GRAVEL.
10. CONCRETE PAD MAY BE POURED-IN-PLACE OR MAY BE PRECAST (4000 MIN. PSI CONCRETE).
11. TO PREVENT WATER MIGRATION FROM CONCRETE WHEN POURING, PLACE WATERPROOF MEMBRANE ON CRUSHED STONE OR GRAVEL BEFORE POURING CONCRETE.
12. REINFORCING WIRE MESH SHALL CONFORM TO ASTM DESIGNATION A185.
13. CEMENT TO BE 1 OR 1-A AND MEETING ASTM DESIGNATIONS C-150 AND C-175 RESPECTIVELY.
14. POURED PAD CONCRETE TO DEVELOP MINIMUM 4000 PSI AT 28 DAYS AGE, CONTAIN MINIMUM OF 5.5 BAGS OF CEMENT PER CUBIC YARD AND MAXIMUM OF 6 GALLONS OF WATER PER 94-POUND BAG OF CEMENT, AND CONFORM TO ASTM DESIGNATION C-94. FOURTEEN (14) DAYS MINIMUM DRYING TIME BEFORE TRANSFORMER IS SET. THE VOLUME OF CONCRETE IS APPROXIMATELY 1.7 CUBIC YARDS.
15. SEAL ALL OPENINGS AROUND CONDUITS WITH GROUT; CAP ALL SPARE CONDUITS TO PREVENT ENTRY OF RODENTS AND ANIMALS INTO TRANSFORMER COMPARTMENT.
16. IF CONDUIT EXTENDS INTO BUILDING, IT SHALL BE SEALED (PER NEC) AT BUILDING END TO PREVENT GAS FROM ENTERING BUILDING THROUGH THE CONDUIT.
17. WHERE DAMAGE TO TRANSFORMER BY VEHICLES IS POSSIBLE, TRANSFORMER SHALL BE PROTECTED BY APPROPRIATE BARRIERS.
18. COMMUNICATION GROUND – THE NESC REQUIRES BONDING OF ALL COMMUNICATIONS EQUIPMENT (TELEPHONE, CATV, ETC.) THAT ARE WITHIN SIX (6) FEET OF THE PAD-MOUNTED TRANSFORMER. THE WIRE FOR BONDING COMMUNICATIONS EQUIPMENT SHALL BE MINIMUM #6 AWG SOLID COPPER WIRE THAT IS ATTACHED DIRECTLY TO GROUND ROD, RUNS UNDERNEATH THE CONCRETE PAD, EXTENDS 12 INCHES BEYOND THE EDGE OF THE PAD, AND FINALLY RUNS ALONGSIDE THE PAD FOUNDATION.
19. IN AREAS WHERE SETTLING MAY OCCUR, INSTALL THREE (3) CONCRETE PIERS, 8-INCH MINIMUM DIAMETER, 36 INCHES DEEP, IN A TRIANGULAR CONFIGURATION UNDER FOUNDATION. CONTRACTOR SHALL CONTACT THE COMPANY FOR DETAILS.

CONCRETE FLAT-PAD FOUNDATION PAD-MOUNTED TRANSFORMER

NO SCALE

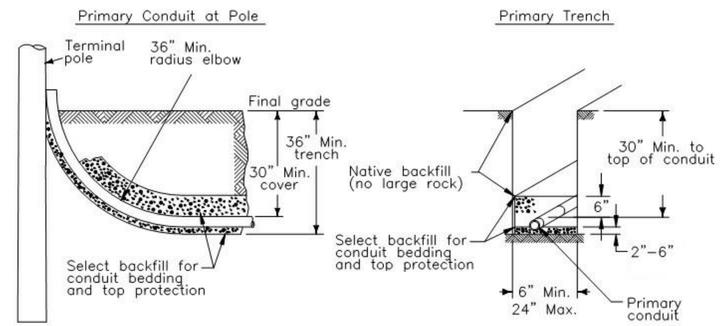

NOTES:
1. USE 5" SCHEDULE 40 CONDUIT.
2. COORDINATE HE INSTALLATION OF ALL OTHER BURIED UTILITIES THAT ARE IN THE VICINITY, WILL OCCUPY THE TRENCH, OR CROSS THE TRENCH. MINIMUM CLEARANCES INCLUDE (BUT NOT LIMITED TO):
   A. FUEL LINES - 4'
   B. TELEPHONE & CATV - 1' SEPARATION (HORIZONTAL OR VERTICAL)
3. THE BOTTOM OF THE TRENCH SHALL BE RELATIVELY SMOOTH, UNDISTURBED EARTH, WELL-TAMPED EARTH, OR SAND, WHICH IS FREE FROM ROCK, CINDERS, OR SHARP OBJECTS.
4. THE CONTRACTOR SHALL BACKFILL AROUND ALL CABLES AND CONDUITS WITH SIX (6) INCHES OF APPROVED BACKFILL. APPROVED BACKFILL SHALL BE GRADED SAND, STONE DUST, LIMESTONE DUST, ROCK-FREE (1/4 INCH OR LESS DIAMETER STONES) EARTH, OR TOPSOIL. MATERIALS THAT "SET UP" SUCH AS FLY ASH, CULMS, AND FOUNDRY WASTE ARE NOT ACCEPTABLE. THE REMAINDER OF THE TRENCH SHALL BE BACKFILLED WITH NATIVE SOIL AND NOT CONTAIN LARGE ROCKS (GREATER THAN 4 INCH) OR ROCKS WITH SHARP EDGES. AN ADDITIONAL SIX (6) INCHES OF MOUNDED BACKFILL IS RECOMMENDED TO ALLOW FOR SETTLING.
5. COORDINATE ALL UTILITY REQUIREMENTS WITH UTILITY PRIOR TO COMMENCING WORK. THIS INCLUDES NOTIFICATION PERIODS AND ANY REQUIREMENTS FOR INSPECTION.

TYPICAL TRENCHING DETAILS FOR INSTALLATION OF PRIMARY CONDUITS

NO SCALE

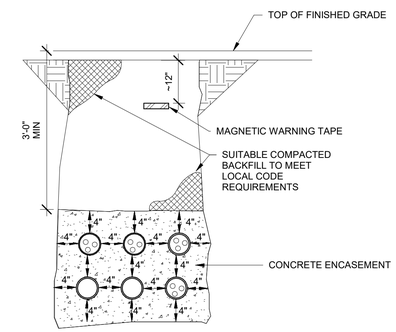

NOTE:
ELECTRICAL CONTRACTOR IS RESPONSIBLE FOR CONDUIT, CONCRETE, TRENCHING , AND BACKFILL.
PROVIDE 4" CONDUITS. PROVIDE PULL STRINGS IN SPARE CONDUIT

GENERATOR DUCT BANK DETAIL

NO SCALE

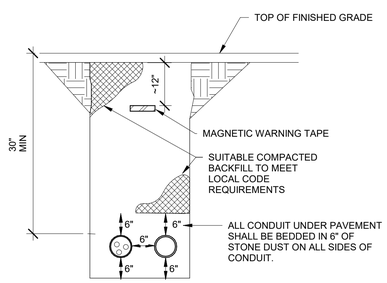

NOTE:
ELECTRICAL CONTRACTOR IS RESPONSIBLE FOR CONDUIT, CONCRETE, TRENCHING , AND BACKFILL. PROVIDE 5" CONDUIT. WHERE MINIMUM 30" COVER CANNOT BE ACHIEVED, PROVIDE CONCRETE ENCASEMENT WITH AT LEAST 4" OF COVER ON ALL SIDES OF CONDUIT.

PRIMARY SERVICE DUCT BANK DETAIL

NO SCALE

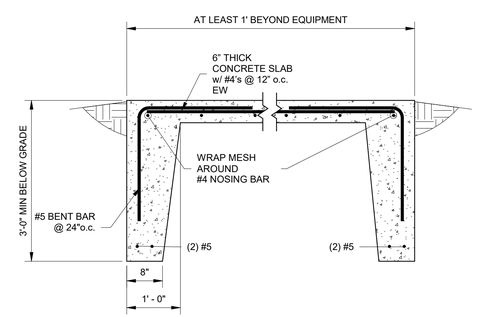

GENERATOR PAD DETAIL

NO SCALE

Professional Certification. I hereby certify that these documents were prepared or approved by me, and that I am a duly licensed professional engineer under the laws of the State of Maryland. License No. 49693, Expiration Date: 2020-07-24.

STATE OF MARYLAND KATHRYN PARFITT 49693 PROFESSIONAL ENGINEER

ALL REPORTS, PLANS SPECIFICATIONS AND COMPUTER FILES RELATING TO THIS PROJECT ARE THE PROPERTY OF CRABTREE, ROHRBAUGH & ASSOCIATES. CRABTREE ROHRBAUGH & ASSOCIATES RETAINS ALL COMMON LAW, STATUTE AND OTHER RESERVED RIGHTS INCLUDING THE COPYRIGHT THERETO. REPRODUCTION OF THE MATERIAL HERIN OR SUBSTANTIAL USE WITHOUT WRITTEN PERMISSION OF CRABTREE, ROHRBAUGH & ASSOCIATES VIOLATES THE COPYRIGHT LAWS OF THE UNITED STATES AND WILL BE SUBJECT TO LEGAL PROSECUTION.
© CRABTREE, ROHRBAUGH & ASSOCIATES, INC 2019

REVISIONS

#	MM-DD-YR	NAME	DESCRIPTION OF CHANGES

CRABTREE ROHRBAUGH & ASSOCIATES - ARCHITECTS
100 WEST ROAD, SUITE 402, TOWSON MD 21204 410-528-0272
www.cra-architects.com
MECHANICSBURG, PENNSYLVANIA CHARLOTTESVILLE, VIRGINIA WHITE SULPHUR SPRINGS, WEST VIRGINIA

PROPOSED NEW
WASHINGTON COUNTY PUBLIC SAFETY TRAINING CENTER
WASHINGTON COUNTY PROJECT NO. 28-266
18350 PUBLIC SAFETY PLACE
HAGERSTOWN, MD 21740

SITE ELECTRICAL DETAILS

PLOT SCALE: As indicated
FILENAME:
DATE: December 18, 2019

PROJECT 3089

E0.6

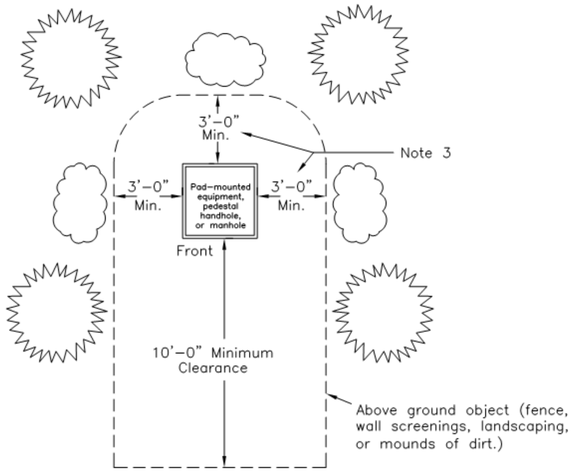

NOTES:
1. WARNING: PAD-MOUNTED EQUIPMENT HAVE UNDERGROUND ELECTRIC CABLES ENTERING AND EXITING THEM BELOW GRADE. WHEN IT IS DECIDED TO INSTALL PLANTS OR OBJECTS AROUND A PAD, CALL THE APPROPRIATE STATE ONE-CALL AGENCY BEFORE DIGGING SO THAT UNDERGROUND CABLE LOCATIONS CAN BE MARKED.
2. THREE FEET MINIMUM CLEARANCE SHALL BE MAINTAINED EVEN AFTER ALL PLANTS HAVE REACHED THEIR MATURITY. TO ALLOW FUTURE GROWTH, PLANT VEGETATION SHOULD BE PLACED AT LEAST SEVEN FEET FROM THE BACK AND SIDE OF THE PAD-MOUNTED DEVICE, PEDESTAL, OR HARDWARE. AVOID PLANTING SHURBS OR SETTING POSTS DIRECTLY OVER CABLES.
3. IF PAD-MOUNTED EQUIPMENT IS A SWITCH OR OTHER SIMILAR DEVICE WITH FRONT, SIDE OR REAR DOORS. THE MINIMUM 3' CLEARANCE SHALL BE INCREASED TO 10'.
4. MINIMUM SAFTETY CLEARANCES TO GAS METERS SHALL BE 3' AND TO TANKS CONTAINING FLAMMABLE LIQUIDS OR GASSES 15'.

CLEARANCES OF PAD-MOUNTED EQUIPMENT FROM OBSTRUCTIONS

NO SCALE

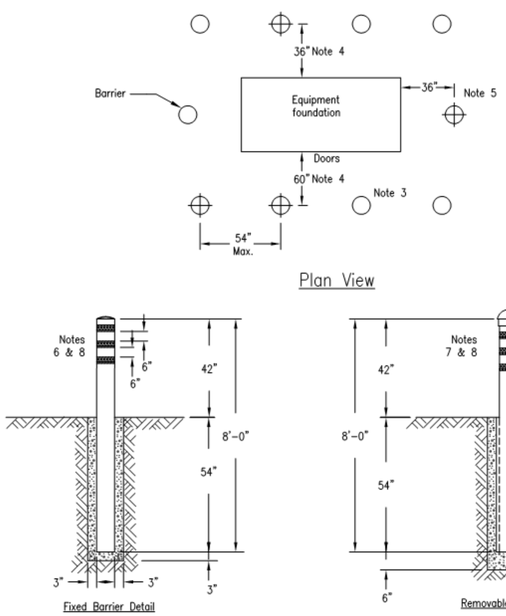

NOTES:
1. USE BARRIERS TO PROTECT EQUIPMENT FROM POSSIBLE DAMAGE FROM VEHICLES. CONTRACTOR SHALL CONTACT COMPANY FOR PLACEMENT.
2. PROVIDE CLEARANCE FOR OPERATION, REMOVAL, OR REPLACEMENT OF EQUIPMENT WHEN OVERHEAD OBSTACLES PREVENT REMOVAL OF EQUIPMENT, ONE BARRIER SHALL BE REMOVABLE.
3. WHEN NECESSARY, HEIGHT OF BARRIER ABOVE GROUND MAY BE INCREASED TO PREVENT LARGE VEHICLES FROM STRIKING PAD-MOUNTED EQUIPMENT.
4. POSITION BARRIERS 60" FROM EQUIPMENT FOUNDATION ON ALL SIDES WHERE EQUIPMENT DOORS WILL BE LOCATED. REMOVABLE BARRIERS SHALL NOT BE INSTALLED AS A MEANS OF PROVIDING CLEARANCE TO OPEN EQUIPMENT DOORS.
5. WITH COMPANY APPROVAL THIS DISTANCE MAY BE REDUCED TO 24" PROVIDED CLEARANCES ARE MAINTAINED FOR ITEMS SUCH AS TRANSFORMER RADIATORS AND METERING.
6. FOR FIXED VEHICLE BARRIER, USE 6" DIAMETER RIGID GALVANIZED STEEL CONDUIT, CUT TO 8' AND FILL WITH CONCRETE. ENCASE IN 3 INCHES OF CONCRETE, AS SHOWN. POWER INSTALLED BUMPER POSTS (MINIMUM SIZE: 84" LONG, 3-1/2" DIAMTER, 8" HELIX) ARE ALSO APPROVED.
7. FOR REMOVABLE VEHICLE BARRIERS, USE 6" DIAMETER PVC SCHEDULE 40 CONDUIT, CUT TO 54" AND ENCASED IN CONCRETE. INSERT 8' OF 5" DIAMTER GALVANIZED STEEL CONDUIT (DO NOT FILL WITH CONCRETE), WITH CAP INTO PVC CONDUIT. USE 6" OF COMPACTED STONE OR GRAVEL FOR SUMP.
8. VEHICLE BARRIERS SHALL BE PAINTED YELLOW IWTH THREE STRIPS OF 3" REFLECTIVE TAPE.
9. CUSTOMER SHALL NOTIFY STATE ONE-CALL AGENCY BEFORE EXCAVATION FOR POSTS.

VEHICULAR BARRIER FOR PAD-MOUNTED EQUIPMENT

NO SCALE

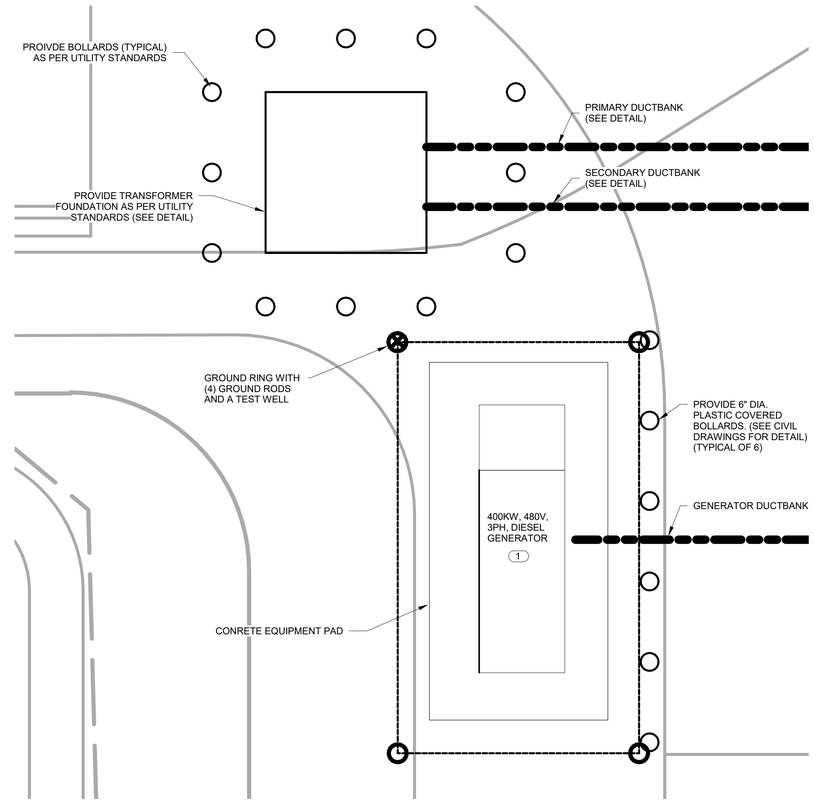

2 ENLARGED PARTIAL SITE PLAN - ELECTRICAL
SCALE: 1/4" = 1'-0"

GENERAL NOTES:

1. FOR THE ELECTRIC UNDERGROUND SERVICE, ALL TRENCHING, BACKFILL, AND CONDUIT SHALL BE PROVIDED BY THE CONTRACTOR. ALL CONDUIT SHALL HAVE A PULL STRING. TRANSFORMER FOUNDATION AND ASSOCIATED WORK SHALL BE PROVIDED BY THE CONTRACTOR. CURRENT TRANSFORMER CABINET IN THE PAD-MOUNTED TRANSFORMER SHALL BE PROVIDED BY THE CONTRACTOR. TRANSFORMER RATED METER SOCKET SHALL BE INSTALLED BY THE CONTRACTOR (FURNISHED BY THE UTILITY). COORDINATE ALL UTILITY REQUIREMENTS WITH THE UTILITY PRIOR TO THE WORK COMMENCING.
2. THE POTOMAC EDISON WORK REQUEST NUMBER IS #59537025
3. ALL EXTERIOR LIGHTING SHALL BE RUN THROUGH THE LIGHTING CONTACTOR FOR CONTROL.

NOTES BY SYMBOL: (#)
(THIS SHEET ONLY)

1. CONNECT EMERGENCY GENERATOR ACCESSORIES TO CIRCUITS LA-56 & LA-58.

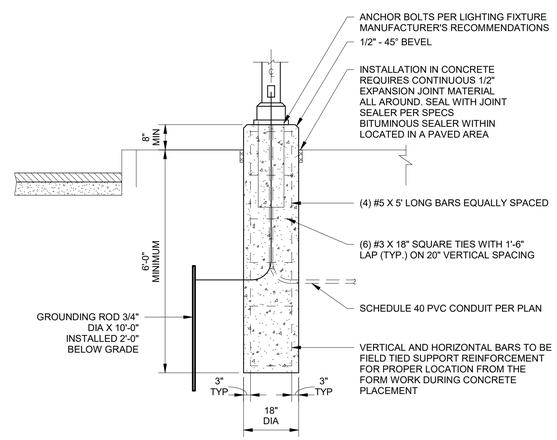

NOTE:
1. 3500 PSI MIN 28 DAY COMPRESSIVE STRENGTH CONCRETE WITH GRADE 60 REINFORCING STEEL.
2. SET POLES 3' MINIMUM FROM EDGE OF PAVEMENT WHERE NO CURB EXISTS.

PARKING LOT LIGHT STANDARD BASE

NO SCALE

Professional Certification. I hereby certify that these documents were prepared or approved by me, and that I am a duly licensed professional engineer under the laws of the State of Maryland. License No. 49693, Expiration Date: 2020-07-24.

STATE OF MARYLAND
KATHRYN PARFITT
49693
PROFESSIONAL ENGINEER

ALL REPORTS, PLANS SPECIFICATIONS AND COMPUTER FILES RELATING TO THIS PROJECT ARE THE PROPERTY OF CRABTREE, ROHRBAUGH & ASSOCIATES. CRABTREE ROHRBAUGH & ASSOCIATES RETAINS ALL COMMON LAW, STATUTE AND OTHER RESERVED RIGHTS INCLUDING THE COPYRIGHT THERETO. REPRODUCTION OF THE MATERIAL HERIN OR SUBSTANTIAL USE WITHOUT WRITTEN PERMISSION OF CRABTREE, ROHRBAUGH & ASSOCIATES VIOLATES THE COPYRIGHT LAWS OF THE UNITED STATES AND WILL BE SUBJECT TO LEGAL PROSECUTION.
© CRABTREE, ROHRBAUGH & ASSOCIATES, INC 2019

REVISIONS

#	MM-DD-YR	NAME	DESCRIPTION OF CHANGES

CRABTREE ROHRBAUGH & ASSOCIATES - ARCHITECTS
100 WEST ROAD, SUITE 402, TOWSON MD 21204 410-528-0272 www.cra-architects.com
MECHANICSBURG, PENNSYLVANIA CHARLOTTESVILLE, VIRGINIA WHITE SULPHUR SPRINGS, WEST VIRGINIA

PROPOSED NEW
WASHINGTON COUNTY PUBLIC SAFETY TRAINING CENTER
WASHINGTON COUNTY PROJECT NO. 28-266
18350 PUBLIC SAFETY PLACE
HAGERSTOWN, MD 21740

SITE ELECTRICAL DETAILS

PLOT SCALE: As indicated
FILENAME:
DATE: December 18, 2019

PROJECT 3089

E0.7

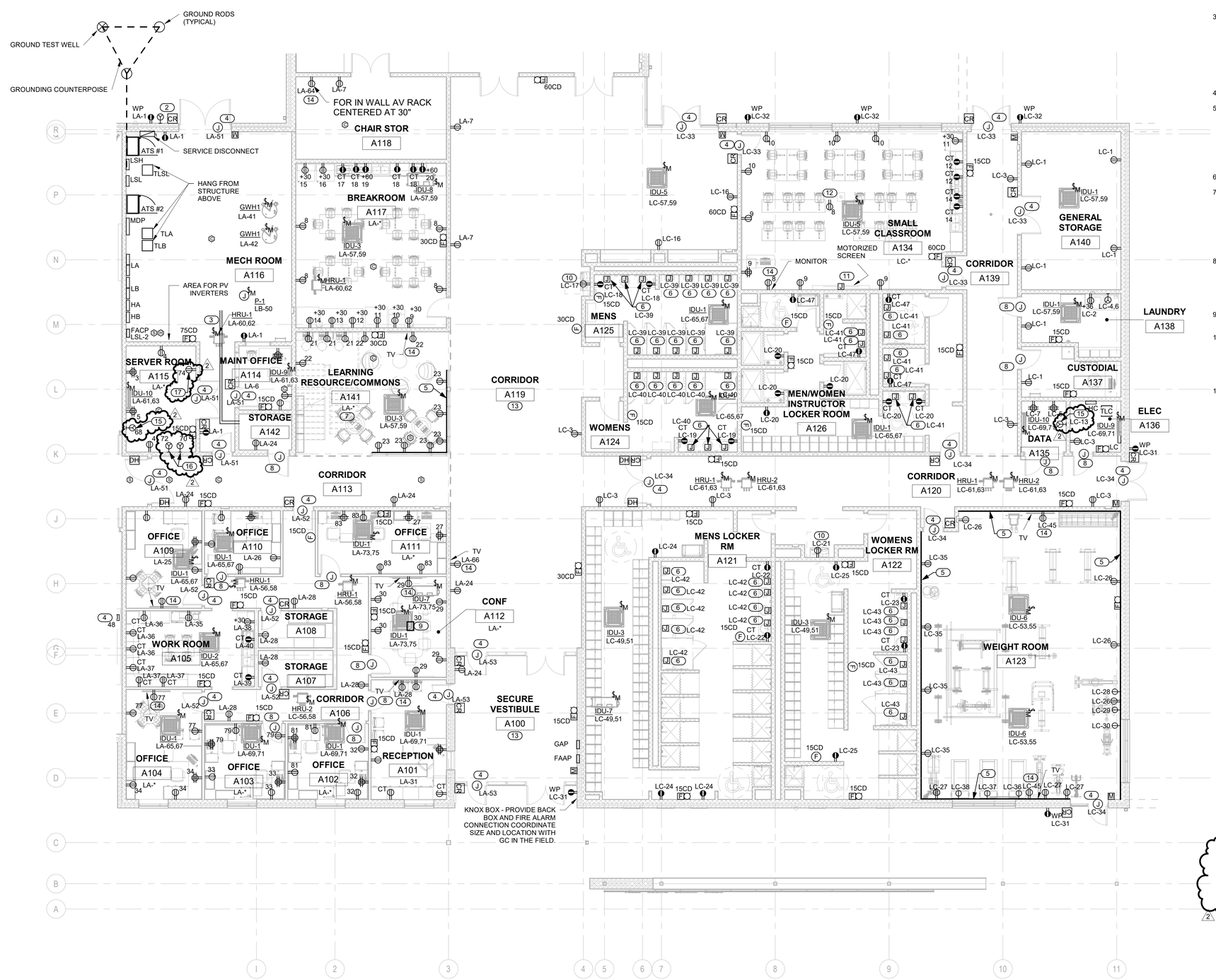

1 FIRST FLOOR PLAN - UNIT A - POWER

SCALE: 1/8" = 1'-0"

GENERAL NOTES:

1. IN OFFICE AREA PROVIDE FIRE ALARM CIRCUIT WITH 25% SPARE CAPACITY.
2. PROVIDE 1" CONDUIT TO ALL INTERIOR DOOR FRAMES THAT ARE NOT SCHEDULED TO RECEIVE ELECTRONIC HARDWARE FOR FUTURE INSTALLATION OF CARD READERS, ETC. CONDUITS TO EXTEND FROM DOOR FRAME TO POINT ABOVE THE FINISH CEILING FOR EASY INSTALLATION OF WIRING, ETC. IN THE FUTURE.
3. SEE DETAILS FOR FLOOR AND WALL PENETRATION SEALING REQUIREMENTS. WHERE CONDUIT AND WIRE PENETRATES THE WALL, THE WALL SHALL NOT ACT AS A SUPPORT. THE RACEWAY SHALL BE INDEPENDENTLY SUPPORTED ON EACH SIDE OF THE WALL. IF THE WALL PENETRATION IS NOT SEALED, PROVIDE SLEEVE TO PROTECT RACEWAY FROM DAMAGE. WALL AND FLOOR PENETRATIONS SHALL BE CUT USING HOLE SAWS OR EQUIVALENT. PENETRATION SHALL NOT HAVE JAGGED EDGES.
4. SEE DETAILS FOR CLARIFICATION OF TYPICAL CIRCUIT DESIGNATIONS.
5. PROVIDE POWER TO ALL DOORS WITH HARDWARE REQUIRING POWER CONNECTIONS. PROVIDE CONDUITS FOR ALL DOOR HARDWARE CABLING. INSTALL ALL CABLING FURNISHED BY THE DOOR HARDWARE SUPPLIER. COORDINATE WITH THE DOOR HARDWARE SUPPLIER FOR A SPECIFIC LIST OF DOORS REQUIRING POWER AND CABLING INSTALLATION. SEE DOOR HARDWARE SCHEDULE FOR MORE INFORMATION. SEE DETAILS FOR MORE INFORMATION.
6. ALL RECEPTACLES LOCATED IN CEILING SHALL FACE INTO OCCUPIED SPACE.
7. FOR ALL RECEPTACLES NOTED AS POWERING TVS OR MONITORS, COORDINATE EXACT MOUNTING HEIGHT AND LOCATION WITH INTERIOR DRAWINGS TO ENSURE RECEPTACLE AND DATA FALL BEHIND TV. RECEPTACLES INSTALLED WITHOUT PROPER COORDINATION SHALL BE RELOCATED AT NO ADDITIONAL COST TO THE OWNER. COORDINATE LOCATION OF DATA DEVICE WITH POWER BOX. BOXES SHALL BE INSTALLED DIRECTLY ADJACENT TO EACH OTHER.
8. COORDINATE THE LOCATION OF ALL RECEPTACLES LOCATED ADJACENT TO TACK BOARDS, TACKSTRIPS, AND OTHER PERMANENT WALL FIXTURES. RECEPTACLES SHALL NOT BE LOCATED BEHIND TACK BOARDS AND TACKSTRIPS. SEE ARCHITECTURAL INTERIOR DRAWINGS FOR EXACT LOCATIONS OF TACK BOARDS AND OTHER PERMANENT WALL FIXTURES.
9. COORDINATE COUNTERTOP RECEPTACLE LOCATIONS WITH CASEWORK. ENSURE RECEPTACLES ARE NOT BEHIND TALL UNITS.
10. IN AREAS WHERE THERE IS NO CEILING OR CEILING CLOUDS, ALL DEVICES, BOXES, CONDUITS, AND APPEARANCE SHALL BE PAINTABLE. ALL CONDUIT AND WIRE SHALL BE RUN TIGHT TO THE STRCTURE. ALL LABELS FOR JUNCTION BOXES, CONDUIT, AND DEVICES WHERE EVERYTHING IS PAINTED SHALL BE INSTALLED AFTER PAINTING.
11. COORDINATE LOCATION OF ALL FIRE ALARM DEVICES WITH INTERIOR DRAWINGS BEFORE ROUGH-IN. COORDINATE SPECIFICALLY WITH SOUND PANELS, MIRRORS, TACTBOARDS, AND WHITEBOARDS.

NOTES BY SYMBOL: (#)

(THIS SHEET ONLY)

1. PROVIDE TWO COMPARTMENT DIVIDED SURFACE RACEWAY NO LARGER THAN 4" HIGH ON HOLLOW METAL BASE PAINTED TO MATCH BASE. BASIS OF DESIGN: WIREMOLD AL4750.
2. PROVIDE 100A, 125/250V, 3PH, PIN AND SLEEVE RECEPTACLE. HUBBELL MODEL # M4100R12. CONFIGURATION TO MATCH MOBILE COMMAND UNIT PLUG IN WEATHER PROOF ENCLOSURE.
3. PROVIDE (1) 3" CONDUIT & (1) 1" CONDUIT FOR FUTURE ELEVATOR. PROVIDE PULL STRING.
4. PROVIDE POWER TO DOOR HARDWARE REQUIRING POWER. SEE DETAILS FOR MORE INFORMATION. CIRCUIT SHOWN SHALL BE USED BY ALL DOORS IN THE GENERAL AREA. FOR FIRE DOORS, PROVIDE SMOKE DETECTORS ON EITHER SIDE OF DOOR WITHIN 5' CONNECTED TO THE DOOR HARDWARE. CONNECT TO FIRE ALARM FOR DOOR RELEASE IN EMERGENCY.
5. PROVIDE PLUGMOLD RACEWAY WITH RECEPTACLES FINISH. SELECTED BY ARCHITECT.
6. PROVIDE 24V TRANSFORMER, POWER TO TRANSFORMER AND FINAL CONNECTION TO PLUMBING FIXTURE.
7. FOR ALL POWER WIRING FOR DEVICES IN THE CEILING OR ESLEWHERE IN THE SPACE, AN ACCESS PANEL MUST BE UTILIZED FOR ANY JUNCTION BOX LOCATIONS. THE BRANCH CIRCUIT CONDUIT SHALL BE CONCEILED BEHIND THE EPIC DECK PANELS. REFER TO EPIC DECK DETAILS ON ARCHITECTURAL PLANS FOR INSTALLATION PRACTICE FOR ELECTRICAL DEVICES AND CONDUIT. EXPOSED CONDUIT SHALL NOT BE USED.
8. PROVIDE 1"C TO DOOR FRAME AND EXTEND TO 6" ABOVE ACCESSIBLE CEILING WITH PULL STRING.
9. FLOOR BOX - PROVIDE (2) DUPLEX RECEPTACLES.
10. RECEPTACLE FOR EWC SHALL BE INSTALLED TO ENSURE IT IS COVERED BY SKIRT. COORDINATE WITH SELECTED FIXTURE.
11. PROVIDE FINAL POWER CONNECTION TO MOTORIZED SCREEN. CONTROL DEVICE PROVIDED WITH UNIT. PROVIDE ALL INTERCONNECTING WIRING.
12. PROVIDE RECEPTACLE IN CEILING FOR PROJECTOR.
13. PROVIDE COMPLETE SMOKE DETECTION COVERAGE IN THIS AREA WITH BEAM STYLE SMOKE DETECTORS.
14. REFER TO AV DRAWINGS FOR MOUNTING HEIGHTS OF OUTLETS FOR DISPLAYS.
15. PROVIDE LOCKING 30A 120V RECEPTACLE FOR UPS. COORDINATE EXACT ROOM LAYOUT IN FIELD.
16. PROVIDE (2) LOCKING 30A 120V RECEPTACLES FOR AV RACK. COORDINATE EXACT ROOM LAYOUT IN FIELD.
17. PROVIDE (1) DEDICATED 20A 120V RECEPTACLE FOR SECURITY RACK. COORDINATE EXACT ROOM LAYOUT IN FIELD.

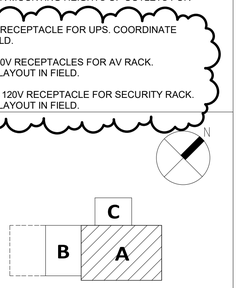

KEY PLAN

Professional Certification. I hereby certify that these documents were prepared or approved by me, and that I am a duly licensed professional engineer under the laws of the State of Maryland. License No. 49693, Expiration Date: 2020-07-24.

STATE OF MARYLAND
KATHRYN PARFITT
49693
PROFESSIONAL ENGINEER

ALL REPORTS, PLANS SPECIFICATIONS AND COMPUTER FILES RELATING TO THIS PROJECT ARE THE PROPERTY OF CRABTREE, ROHRBAUGH & ASSOCIATES. CRABTREE ROHRBAUGH & ASSOCIATES RETAINS ALL COMMON LAW, STATUTE AND OTHER RESERVED RIGHTS INCLUDING THE COPYRIGHT THERETO. REPRODUCTION OF THE MATERIAL HERIN OR SUBSTANTIAL USE WITHOUT WRITTEN PERMISSION OF CRABTREE, ROHRBAUGH & ASSOCIATES VIOLATES THE COPYRIGHT LAWS OF THE UNITED STATES AND WILL BE SUBJECT TO LEGAL PROSECUTION.
© CRABTREE, ROHRBAUGH & ASSOCIATES, INC 2019

REVISIONS

#	MM-DD-YR	NAME	DESCRIPTION OF CHANGES
2	08/28/20	BIA	ADDENDUM 4

CRABTREE ROHRBAUGH & ASSOCIATES - ARCHITECTS
100 WEST ROAD, SUITE 402, TOWSON MD 21204 410-528-0272
www.cra-architects.com
MECHANICSBURG, PENNSYLVANIA CHARLOTTESVILLE, VIRGINIA WHITE SULPHUR SPRINGS, WEST VIRGINIA

PROPOSED NEW
WASHINGTON COUNTY PUBLIC SAFETY TRAINING CENTER
WASHINGTON COUNTY PROJECT NO. 28-266
18350 PUBLIC SAFETY PLACE
HAGERSTOWN, MD 21740

FIRST FLOOR PLAN - UNIT A - POWER

PLOT SCALE: 1/8" = 1'-0"

FILENAME:

DATE: December 18, 2019

PROJECT 3089

E1.0

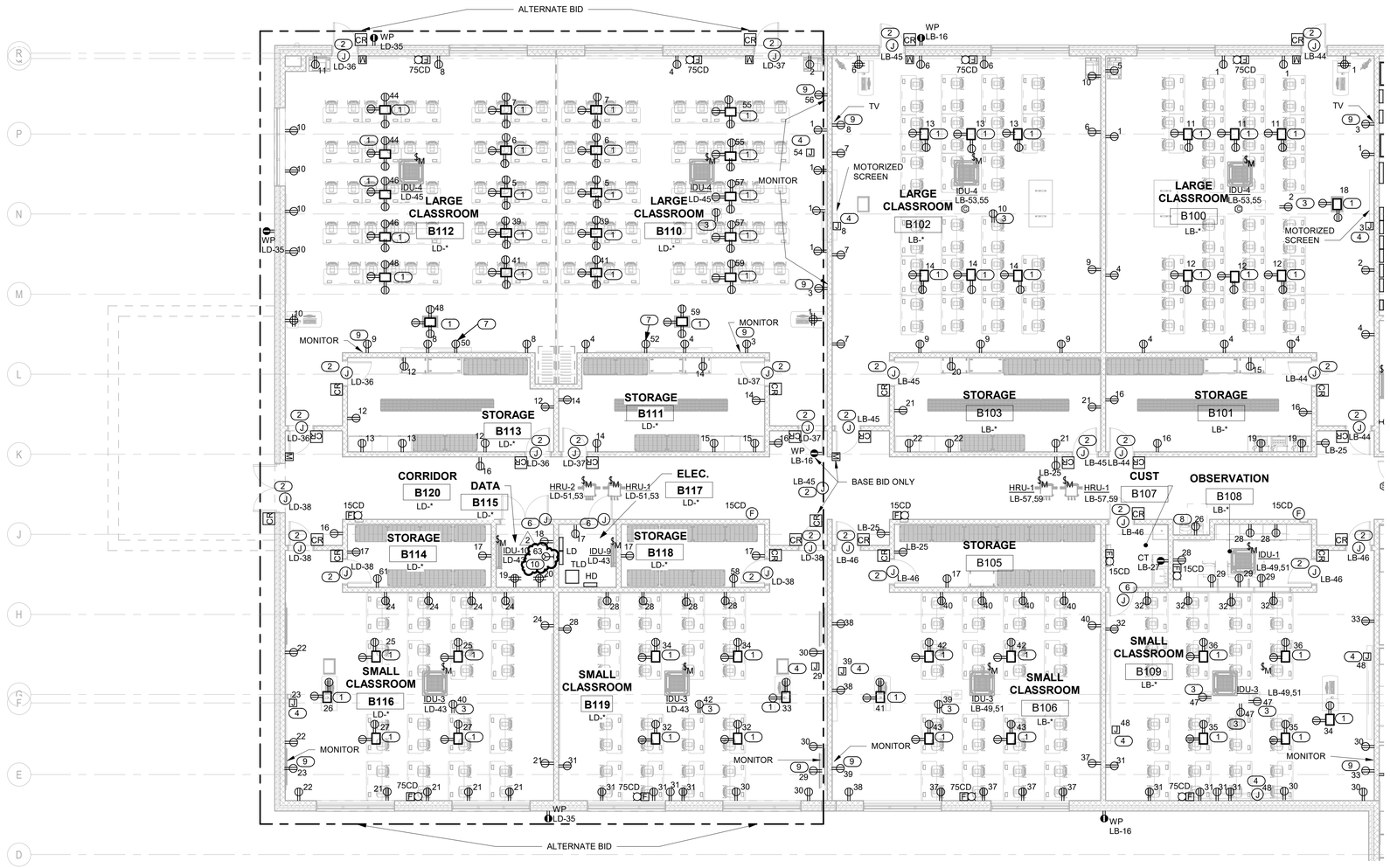

1 FIRST FLOOR PLAN - UNIT B - POWER

SCALE: 1/8" = 1'-0"

GENERAL NOTES:

1. PROVIDE 1" CONDUIT TO ALL INTERIOR DOOR FRAMES THAT ARE NOT SCHEDULED TO RECEIVE ELECTRONIC HARDWARE FOR FUTURE INSTALLATION OF CARD READERS, ETC. CONDUITS TO EXTEND FROM DOOR FRAME TO POINT ABOVE THE FINISH CEILING FOR EASY INSTALLATION OF WIRING, ETC. IN THE FUTURE.
2. SEE DETAILS FOR FLOOR AND WALL PENETRATION SEALING REQUIREMENTS. WHERE CONDUIT AND WIRE PENETRATES THE WALL, THE WALL SHALL NOT ACT AS A SUPPORT. THE RACEWAY SHALL BE INDEPENDENTLY SUPPORTED ON EACH SIDE OF THE WALL. IF THE WALL PENETRATION IS NOT SEALED, PROVIDE SLEEVE TO PROTECT RACEWAY FROM DAMAGE. WALL AND FLOOR PENETRATIONS SHALL BE CUT USING HOLE SAWS OR EQUIVALENT. PENETRATION SHALL NOT HAVE JAGGED EDGES.
3. SEE DETAILS FOR CLARIFICATION OF TYPICAL CIRCUIT DESIGNATIONS.
4. PROVIDE POWER TO ALL DOORS WITH HARDWARE REQUIRING POWER CONNECTIONS. PROVIDE CONDUITS FOR ALL DOOR HARDWARE CABLING. INSTALL ALL CABLING FURNISHED BY THE DOOR HARDWARE SUPPLIER. COORDINATE WITH THE DOOR HARDWARE SUPPLIER FOR A SPECIFIC LIST OF DOORS REQUIRING POWER AND CABLING INSTALLATION. SEE DOOR HARDWARE SCHEDULE FOR MORE INFORMATION. SEE DETAILS FOR MORE INFORMATION.
5. ALL RECEPTACLES LOCATED IN CEILING SHALL FACE INTO OCCUPIED SPACE.
6. FOR ALL RECEPTACLES NOTED AS POWERING TVS OR MONITORS, COORDINATE EXACT MOUNTING HEIGHT AND LOCATION WITH INTERIOR DRAWINGS TO ENSURE RECEPTACLE AND DATA FALL BEHIND TV. RECEPTACLES INSTALLED WITHOUT PROPER COORDINATION SHALL BE RELOCATED AT NO ADDITIONAL COST TO THE OWNER. COORDINATE LOCATION OF DATA DEVICE WITH POWER BOX. BOXES SHALL BE INSTALLED DIRECTLY ADJACENT TO EACH OTHER.
7. COORDINATE THE LOCATION OF ALL RECEPTACLES LOCATED ADJACENT TO TACK BOARDS, TACKSTRIPS, AND OTHER PERMANENT WALL FIXTURES. RECEPTACLES SHALL NOT BE LOCATED BEHIND TACK BOARDS AND TACKSTRIPS. SEE ARCHITECTURAL INTERIOR DRAWINGS FOR EXACT LOCATIONS OF TACK BOARDS AND OTHER PERMANENT WALL FIXTURES.
8. COORDINATE COUNTERTOP RECEPTACLE LOCATIONS WITH CASEWORK. ENSURE RECEPTACLES ARE NOT BEHIND TALL UNITS.
9. IN AREAS WHERE THERE IS NO CEILING OR CEILING CLOUDS, ALL DEVICES, BOXES, CONDUITS, AND APPEARANCE SHALL BE PAINTABLE. ALL CONDUIT AND WIRE SHALL BE RUN TIGHT TO THE STRCTURE. ALL LABELS FOR JUNCTION BOXES, CONDUIT, AND DEVICES WHERE EVERYTHING IS PAINTED SHALL BE INSTALLED AFTER PAINTING.
10. COORDINATE LOCATION OF ALL FIRE ALARM DEVICES WITH INTERIOR DRAWINGS BEFORE ROUGH-IN. COORDINATE SPECIFICALLY WITH SOUND PANELS, MIRRORS, TACTBOARDS, AND WHITEBOARDS.

NOTES BY SYMBOL: (#)

(THIS SHEET ONLY)

1. PROVIDE FOUR COMPARTMENT DIVIDED FLOOR BOX WITH DEVICES INDICATED. BASIS OF DESIGN: WIREMOLD EFB45 SERIES. COORDINATE EXACT LOCATION WITH ARCHITECT PRIOR TO ROUGH-IN.
2. PROVIDE POWER TO DOOR HARDWARE REQUIRING POWER. SEE DETAILS FOR MORE INFORMATION. CIRCUIT SHOWN SHALL BE USED BY ALL DOORS IN THE GENERAL AREA. FOR FIRE DOORS, PROVIDE SMOKE DETECTORS ON EITHER SIDE OF DOOR WITHIN 5' CONNECTED TO THE DOOR HARDWARE. CONNECT TO FIRE ALARM FOR DOOR RELEASE IN EMERGENCY.
3. PROVIDE CEILING MOUNTED RECEPTACLE TO POWER PROJECTOR. VERIFY EXACT LOCATION IN FIELD.
4. PROVIDE POWER FOR MOTORIZED PROJECTION SCREEN. VERIFY EXACT LOCATION IN FIELD.
5. NOT USED.
6. PROVIDE 1"C TO DOOR FRAME AND EXTEND TO 6" ABOVE ACCESSIBLE CEILING WITH PULL STRING.
7. PROVIDE RECEPTACLE FOR SHORT THROW PROJECTOR. COORDINATE EXACT MOUNTING HEIGHT IN THE FIELD.
8. RECEPTACLE FOR EWC SHALL BE INSTALLED TO ENSURE IT IS COVERED BY SKIRT. COORDINATE WITH SELECTED FIXTURE.
9. REFER TO AV DRAWINGS FOR MOUNTING HEIGHTS OF OUTLETS FOR DISPLAYS.
10. PROVIDE LOCKING 30A 120V RECEPTACLE FOR UPS. COORDINATE EXACT ROOM LAYOUT IN FIELD.

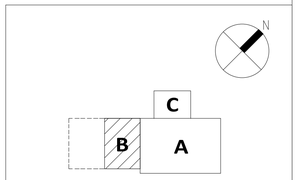

KEY PLAN

Professional Certification. I hereby certify that these documents were prepared or approved by me, and that I am a duly licensed professional engineer under the laws of the State of Maryland. License No. 49693, Expiration Date: 2020-07-24.

STATE OF MARYLAND KATHRYN PARFITT 49693 PROFESSIONAL ENGINEER

ALL REPORTS, PLANS SPECIFICATIONS AND COMPUTER FILES RELATING TO THIS PROJECT ARE THE PROPERTY OF CRABTREE, ROHRBAUGH & ASSOCIATES. CRABTREE ROHRBAUGH & ASSOCIATES RETAINS ALL COMMON LAW, STATUTE AND OTHER RESERVED RIGHTS INCLUDING THE COPYRIGHT THERETO. REPRODUCTION OF THE MATERIAL HERIN OR SUBSTANTIAL USE WITHOUT WRITTEN PERMISSION OF CRABTREE, ROHRBAUGH & ASSOCIATES VIOLATES THE COPYRIGHT LAWS OF THE UNITED STATES AND WILL BE SUBJECT TO LEGAL PROSECUTION.
© CRABTREE, ROHRBAUGH & ASSOCIATES, INC 2019

REVISIONS

#	MM-DD-YR	NAME	DESCRIPTION OF CHANGES
2	08/28/20	BIA	ADDENDUM 4

CRABTREE ROHRBAUGH & ASSOCIATES - ARCHITECTS
100 WEST ROAD, SUITE 402, TOWSON MD 21204 410-528-0272
MECHANICSBURG, PENNSYLVANIA CHARLOTTESVILLE, VIRGINIA WHITE SULPHUR SPRINGS, WEST VIRGINIA
www.cra-architects.com

PROPOSED NEW
WASHINGTON COUNTY PUBLIC SAFETY TRAINING CENTER
WASHINGTON COUNTY PROJECT NO. 28-266
18350 PUBLIC SAFETY PLACE
HAGERSTOWN, MD 21740

FIRST FLOOR PLAN - UNIT B - POWER

PLOT SCALE: 1/8" = 1'-0"

FILENAME:

DATE: December 18, 2019

PROJECT 3089

E1.1

PANEL: LA SECTION 1 BUS AMP: 200A AMPS MAIN BREAKER: 175A

MOUNTING: SURFACE PHASE: 3 WIRE: 4 VOLTAGE: 208/120 AIC: 18,000

CKT	CIRCUIT DESCRIPTION	BREAKER P	BREAKER AMP	WIRE NO	WIRE SIZE	GND SIZE	COND	LOAD KVA	KVA/PH A	KVA/PH B	KVA/PH C	LOAD KVA	COND	GND SIZE	WIRE SIZE	WIRE NO	BREAKER AMP	BREAKER P	CIRCUIT DESCRIPTION	CKT
1	REC - A116	1	20	2	12	12	3/4"	0.9	0.9			0.0					20	1	SPARE	2
3	REC - A115	1	20	2	12	12	3/4"	0.4		0.7		0.4	3/4"	12	12	2	20	1	REC - A115	4
5	REC - A115	1	20	2	12	12	3/4"	0.4			0.9	0.5	3/4"	12	12	2	20	1	REC - A114	6
7	REC - A118, A119	1	20	2	12	12	3/4"	0.5	1.3			0.7	3/4"	12	12	2	20	1	REC - A117	8
9	REC - A117	1	20	2	12	12	3/4"	0.5		1.5		1.0	3/4"	12	12	2	20	1	REC - A117 (ICE MAKER)	10
11	REC - A117 (VENDING)	1	20	2	12	12	3/4"	1.0			2.0	1.0	3/4"	12	12	2	20	1	REC - A117 (VENDING)	12
13	REC - A117 (VENDING)	1	20	2	12	12	3/4"	1.0	2.0			1.0	3/4"	12	12	2	20	1	REC - A117 (VENDING)	14
15	REC - A117 (REFRIG.)	1	20	2	12	12	3/4"	1.0		2.0		1.0	3/4"	12	12	2	20	1	REC - A117 (REFRIG.)	16
17	REC - A117 (MICRO)	1	20	2	12	12	3/4"	1.2			1.7	0.5	3/4"	12	12	2	20	1	REC - A117 (COUNTER)	18
19	REC - A117 (MICRO)	1	20	2	12	12	3/4"	1.2	2.4			1.2	3/4"	12	12	2	20	1	REC - A117 (MICRO)	20
21	REC - A113	1	20	2	12	12	3/4"	0.5		1.3		0.7	3/4"	12	12	2	20	1	REC - A113	22
23	REC - A113	1	20	2	12	12	3/4"	0.7			1.4	0.7	3/4"	12	12	2	20	1	REC - CORRIDORS	24
25	REC - A109	1	20	2	12	12	3/4"	1.1	2.2			1.1	3/4"	12	12	2	20	1	REC - A110	26
27	REC - A111	1	20	2	12	12	3/4"	0.7		1.6		0.9	3/4"	12	12	2	20	1	REC - A106, A107, A108	28
29	REC - A112	1	20	2	12	12	3/4"	0.7			1.4	0.7	3/4"	12	12	2	20	1	REC - A112	30
31	REC - A101	1	20	2	12	12	3/4"	1.1	1.8			0.7	3/4"	12	12	2	20	1	REC - A102	32
33	REC - A103	1	20	2	12	12	3/4"	1.1		1.8		0.7	3/4"	12	12	2	20	1	REC - A104	34
35	REC - A105	1	20	2	12	12	3/4"	1.0			1.5	0.5	3/4"	12	12	2	20	1	REC - A105	36
37	REC - A105	1	20	2	12	12	3/4"	0.5	1.5			1.0	3/4"	12	12	2	20	1	REC - A105 (REFRIG.) (GFI)	38
39	REC - A105	1	20	2	12	12	3/4"	0.2		1.4		1.2	3/4"	12	12	2	20	1	REC - A105 (MICRO)	40
41	GWH-1	1	20	2	12	12	3/4"	0.5			0.5	0.0	3/4"	12	12	2	20	1	GWH-1	42
								TOTAL KVA/PHASE	12.1	10.3	9.6									
								TOTAL KVA SECTION 1		31.9										
								TOTAL KVA SECTION 2		16.7										
								TOTAL KVA		48.6										
								TOTAL AMPS PANEL		135										

PANEL: LA SECTION 2 BUS AMP: 200A AMPS MAIN BREAKER: MLO

MOUNTING: SURFACE PHASE: 3 WIRE: 4 VOLTAGE: 208/120 AIC: 18,000

CKT	CIRCUIT DESCRIPTION	BREAKER P	BREAKER AMP	WIRE NO	WIRE SIZE	GND SIZE	COND	LOAD KVA	KVA/PH A	KVA/PH B	KVA/PH C	LOAD KVA	COND	GND SIZE	WIRE SIZE	WIRE NO	BREAKER AMP	BREAKER P	CIRCUIT DESCRIPTION	CKT
43	REC - C100	1	20	2	12	12	3/4"	0.7	1.4			0.7	3/4"	12	12	2	20	1	REC - C100	44
45	REC - C100	1	20	2	12	12	3/4"	0.9		1.7		0.8	3/4"	12	12	2	20	1	REC - C100	46
47	REC - C100	1	20	2	12	12	3/4"	0.4			0.7	0.4	3/4"	12	12	2	20	1	REC - C100	48
49	REC - EXTERIOR	1	20	2	12	12	3/4"	0.7	1.0			0.3	3/4"	12	12	2	20	1	DOOR HARDWARE - C-100	50
51	DOOR HARDWARE	1	20	2	12	12	3/4"	1.0		2.3		1.3	3/4"	12	12	2	20	1	DOOR HARDWARE	52
53	DOOR HARDWARE	1	20	2	12	12	3/4"	0.8			1.3	0.5	3/4"	12	12	2	20	1	FLOOR BOX	54
55	FLOOR BOX	1	20	2	12	12	3/4"	0.5	0.8			0.2	3/4"	12	12	2	15	2	HRU - A106	56
57	IDU - A117 & A141	2	15	2	12	12	3/4"	0.4		0.6		0.2								58
59								0.4			0.5	0.1	3/4"	12	12	2	15	2	HRU - A116 & A117	60
61	IDU - A114 & A115	2	15	2	12	12	3/4"	0.1	0.2			0.1								62
63								0.1		0.6		0.5	3/4"	12	12	2	20	1	REC - AV RACK RM A118	64
65	IDU - A104, A105, A109, & A110	2	15	2	12	12	3/4"	0.2			0.7	0.5	3/4"	10	10	2	30	1	REC - CORRIDOR TV	66
67								0.2	0.7			0.5	3/4"	10	10	2	30	1	UPS RACK	68
69	IDU - A101, A102, & 103	2	15	2	12	12	3/4"	0.156		0.7		0.5	3/4"	10	10	2	30	1	AV RACK	70
71								0.156			0.7	0.5	3/4"	10	10	2	30	1	AV RACK	72
73	IDU- A111 & A112	2	15	2	12	12	3/4"	0.2	0.7			0.5	3/4"	12	12	2	20	1	SECURITY RACK	74
75								0.2		0.2		0.0					20	1	SPARE	76
77	REC - A104	1	20	2	12	12	3/4"	0.5			0.5	0.0					20	1	SPARE	78
79	REC - A103	1	20	2	12	12	3/4"	0.7	1.2			0.5	3/4"	12	12	2	20	1	MOTORIZED SCREENS	80
81	REC - A102	1	20	2	12	12	3/4"	0.7		1.7		1.0	3/4"	12	12	2	20	1	ROLLER SHADES	82
83	REC - A111	1	20	2	12	12	3/4"	0.5			1.5	1.0	3/4"	12	12	2	20	1	ROLLER SHADES	84
								TOTAL KVA/PHASE	6.1	7.7	6.0									
								TOTAL KVA PANEL		19.7										
								TOTAL AMPS PANEL		55										

PANEL: LB SECTION 1 BUS AMP: 200A AMPS MAIN BREAKER: 175A

MOUNTING: SURFACE PHASE: 3 WIRE: 4 VOLTAGE: 208/120 AIC: 18,000

CKT	CIRCUIT DESCRIPTION	BREAKER P	BREAKER AMP	WIRE NO	WIRE SIZE	GND SIZE	COND	LOAD KVA	KVA/PH A	KVA/PH B	KVA/PH C	LOAD KVA	COND	GND SIZE	WIRE SIZE	WIRE NO	BREAKER AMP	BREAKER P	CIRCUIT DESCRIPTION	CKT
1	REC - B100	1	20	2	12	12	3/4"	0.7	1.3			0.5	3/4"	12	12	2	20	1	REC - B100	2
3	REC - B100	1	20	2	12	12	3/4"	1.0		1.7		0.7	3/4"	12	12	2	20	1	REC - B100	4
5	REC - B100	1	20	2	12	12	3/4"	1.0			1.7	0.7	3/4"	12	12	2	20	1	REC - B102	6
7	REC - B102	1	20	2	12	12	3/4"	0.5	1.5			1.0	3/4"	12	12	2	20	1	REC - B102	8
9	REC - B102	1	20	2	12	12	3/4"	0.7		1.7		1.0	3/4"	12	12	2	20	1	REC - B102	10
11	FLOOR REC - B100	1	20	2	12	12	3/4"	0.7			1.4	0.7	3/4"	12	12	2	20	1	FLOOR REC - B100	12
13	FLOOR REC - B102	1	20	2	12	12	3/4"	0.7	1.4			0.7	3/4"	12	12	2	20	1	FLOOR REC - B102	14
15	REC - B101	1	20	2	12	12	3/4"	0.5		0.9		0.4	3/4"	12	12	2	20	1	REC - EXTERIOR	16
17	REC - B105	1	20	2	12	12	3/4"	0.2			0.5	0.4	3/4"	12	12	2	20	1	FLOOR BOX B106	18
19	REC - B101	1	20	2	12	12	3/4"	0.4	0.9			0.5	3/4"	12	12	2	20	1	REC - B103	20
21	REC - B103	1	20	2	12	12	3/4"	0.5		0.9		0.4	3/4"	12	12	2	20	1	REC - B103	22
23	SPARE	1	20					0.0			0.0	0.0					20	1	SPARE	24
25	REC - B104	1	20	2	12	12	3/4"	0.7	1.2			0.5	3/4"	12	12	2	20	1	REC - EWC (GFI)	26
27	REC - B107	1	20	2	12	12	3/4"	0.2		0.7		0.5	3/4"	12	12	2	20	1	REC - B108	28
29	REC - B108	1	20	2	12	12	3/4"	0.5			1.1	0.5	3/4"	12	12	2	20	1	REC - B109	30
31	REC - B109	1	20	2	12	12	3/4"	0.9	1.8			0.9	3/4"	12	12	2	20	1	REC - B109	32
33	REC - B109	1	20	2	12	12	3/4"	1.0		1.4		0.4	3/4"	12	12	2	20	1	REC - B109	34
35	FLOOR REC - B109	1	20	2	12	12	3/4"	0.7			1.4	0.7	3/4"	12	12	2	20	1	FLOOR REC - B109	36
37	REC - B106	1	20	2	12	12	3/4"	0.9	1.4			0.5	3/4"	12	12	2	20	1	REC - B106	38
39	REC - B106	1	20	2	12	12	3/4"	1.0		1.9		0.9	3/4"	12	12	2	20	1	REC - B106	40
41	REC - B106	1	20	2	12	12	3/4"	0.4			1.1	0.7	3/4"	12	12	2	20	1	FLOOR REC - B106	42
								TOTAL KVA/PHASE	9.6	9.2	7.3									
								TOTAL KVA SECTION 1		26.0										
								TOTAL KVA SECTION 2		11.6										
								TOTAL KVA		37.6										
								TOTAL AMPS PANEL		104										

PANEL: LB SECTION 2 BUS AMP: 200A AMPS MAIN BREAKER: MLO

MOUNTING: SURFACE PHASE: 3 WIRE: 4 VOLTAGE: 208/120 AIC: 18,000

CKT	CIRCUIT DESCRIPTION	BREAKER P	BREAKER AMP	WIRE NO	WIRE SIZE	GND SIZE	COND	LOAD KVA	KVA/PH A	KVA/PH B	KVA/PH C	LOAD KVA	COND	GND SIZE	WIRE SIZE	WIRE NO	BREAKER AMP	BREAKER P	CIRCUIT DESCRIPTION	CKT
43	FLOOR REC - B106	1	20	2	12	12	3/4"	0.7	1.7			1.0	3/4"	12	12	2	20	1	DOOR HARDWARE	44
45	DOOR HARDWARE	1	20	2	12	12	3/4"	1.3		2.5		1.3	3/4"	12	12	2	20	1	DOOR HARDWARE	46
47	CEILING REC - PROJECTORS	1	20	2	12	12	3/4"	1.0			2.2	1.2	3/4"	12	12	2	20	1	MOTORIZED PROJECTION SCREEN	48
49	IDU - B106, B108, & B109	2	15	2	12	12	3/4"	0.2	0.7			0.5	3/4"	12	12	2	20	1	P-1	50
51								0.2		0.2		0.0					20	1	SPARE	52
53	IDU - B100 & B102	2	15	2	12	12	3/4"	0.2			0.2	0.0					20	1	SPARE	54
55								0.2	0.7			0.5	3/4"	12	12	2	20	1	C100 - MONITOR	56
57	HRU - B104	2	15	2	12	12	3/4"	0.1		0.7		0.5	3/4"	12	12	2	20	1	C100 - MONITOR	58
59								0.1			0.7	0.5	3/4"	12	12	2	20	1	C100 - MONITOR	60
61	INTERIOR LIGHTING CONTACTOR	1	20	2	12	12	3/4"	0.2	0.7			0.5	3/4"	12	12	2	20	1	C100 - MONITOR	62
63	EXTERIOR LIGHTING CONTACTOR	1	20	2	12	12	3/4"	0.2		1.3		1.1	3/4"	12	12	2	20	1	ROOF - REC	64
65	SPARE	1	20					0.0			0.0	0.0					20	1	SPARE	66
67	SPARE	1	20					0.0	0.0			0.0					20	1	SPARE	68
69	SPARE	1	20					0.0		0.0		0.0					20	1	SPARE	70
71	SPARE	1	20					0.0			0.0	0.0					20	1	SPARE	72
73	SPARE	1	20					0.0	0.0			0.0					20	1	SPARE	74
75	PREPARED SPACE	1						0.0		0.0		0.0						1	PREPARED SPACE	76
77	PREPARED SPACE	1						0.0			0.0	0.0						1	PREPARED SPACE	78
79	PREPARED SPACE	1						0.0	0.0			0.0						1	PREPARED SPACE	80
81	PREPARED SPACE	1						0.0		0.0		0.0						1	PREPARED SPACE	82
83	PREPARED SPACE	1						0.0			0.0	0.0						1	PREPARED SPACE	84
								TOTAL KVA/PHASE	3.9	4.7	3.1									
								TOTAL KVA PANEL		11.6										
								TOTAL AMPS PANEL		32										

Professional Certification. I hereby certify that these documents were prepared or approved by me, and that I am a duly Licensed Professional Engineer under the laws of the State of Maryland. License No. 49693, Expiration Date: 2020-07-24.

STATE OF MARYLAND KATHRYN PARFITT 49693 PROFESSIONAL ENGINEER

ALL REPORTS, PLANS SPECIFICATIONS AND COMPUTER FILES RELATING TO THIS PROJECT ARE THE PROPERTY OF CRABTREE, ROHRBAUGH & ASSOCIATES. CRABTREE ROHRBAUGH & ASSOCIATES RETAINS ALL COMMON LAW, STATUTE AND OTHER RESERVED RIGHTS INCLUDING THE COPYRIGHT THERETO. REPRODUCTION OF THE MATERIAL HERIN OR SUBSTANTIAL USE WITHOUT WRITTEN PERMISSION OF CRABTREE, ROHRBAUGH & ASSOCIATES VIOLATES THE COPYRIGHT LAWS OF THE UNITED STATES AND WILL BE SUBJECT TO LEGAL PROSECUTION.
© CRABTREE, ROHRBAUGH & ASSOCIATES, INC 2019

REVISIONS

#	MM-DD-YR	NAME	DESCRIPTION OF CHANGES
2	08/28/20	BIA	ADDENDUM 4

CRABTREE ROHRBAUGH & ASSOCIATES - ARCHITECTS
100 WEST ROAD, SUITE 402, TOWSON MD 21204 410-528-0272
MECHANICSBURG, PENNSYLVANIA CHARLOTTESVILLE, VIRGINIA WHITE SULPHUR SPRINGS, WEST VIRGINIA
www.cra-architects.com

PROPOSED NEW
WASHINGTON COUNTY PUBLIC SAFETY TRAINING CENTER
WASHINGTON COUNTY PROJECT NO. 28-266
18350 PUBLIC SAFETY PLACE
HAGERSTOWN, MD 21740

ELECTRICAL SCHEDULES

PLOT SCALE: AS INDICATED

FILENAME:

DATE: December 18, 2019

PROJECT 3089

E5.2

PANEL: LC SECTION 1 BUS AMP: 200A AMPS MAIN BREAKER: 175A

MOUNTING: SURFACE PHASE: 3 WIRE: 4 VOLTAGE: 208/120 AIC: 18,000

CKT	CIRCUIT DESCRIPTION	BREAKER P	BREAKER AMP	WIRE NO	WIRE SIZE	GND SIZE	COND	LOAD KVA	KVA/PH A	KVA/PH B	KVA/PH C	LOAD KVA	COND	GND SIZE	WIRE SIZE	WIRE NO	BREAKER AMP	BREAKER P	CIRCUIT DESCRIPTION	CKT
1	REC - A137, A138, & A140	1	20	2	12	12	3/4"	1.1	2.6			1.5	3/4"	12	12	2	20	1	WASHER (GFI)	2
3	REC - A139, A120	1	20	2	12	12	3/4"	1.1		3.5		2.4	3/4"	10	10	3	30	2	DRYER	4
5	REC - A135	1	20	2	12	12	3/4"	0.4			2.8	2.4								6
7	REC - A135	1	20	2	12	12	3/4"	0.4	0.9			0.5	3/4"	12	12	2	20	1	REC - A134	8
9	REC - A134	1	20	2	12	12	3/4"	0.7		1.4		0.7	3/4"	12	12	2	20	1	REC - A134	10
11	REC - A134	1	20	2	12	12	3/4"	0.7			1.4	0.4	3/4"	12	12	2	20	1	REC - A134	12
13	REC - UPS	1	30	2	10	10	3/4"	0.5	0.9			0.4	3/4"	12	12	2	20	1	REC - A134	14
15	SPARE	1	20					0.0		0.4		0.4	3/4"	12	12	2	20	1	REC - A119	16
17	REC - EWC (GFI)	1	20	2	12	12	3/4"	0.5			0.9	0.4	3/4"	12	12	2	20	1	REC - A125	18
19	REC - A124	1	20	2	12	12	3/4"	0.4	1.3			0.9	3/4"	12	12	2	20	1	REC - A126	20
21	REC - EWC (GFI)	1	20	2	12	12	3/4"	0.5		0.9		0.4	3/4"	12	12	2	20	1	REC - A121	22
23	REC - A122	1	20	2	12	12	3/4"	0.4			0.9	0.5	3/4"	12	12	2	20	1	REC - A121	24
25	REC - A122	1	20	2	12	12	3/4"	0.4	1.1			0.7	3/4"	12	12	2	20	1	REC - A123	26
27	REC - A123	1	20	2	12	12	3/4"	0.7		1.9		1.2	3/4"	12	12	2	20	1	REC - A123 (TREAD MILL)	28
29	REC - A123	1	20	2	12	12	3/4"	0.2			1.4	1.2	3/4"	12	12	2	20	1	REC - A123 (TREAD MILL)	30
31	REC - EXTERIOR	1	20	2	12	12	3/4"	0.5	1.1			0.5	3/4"	12	12	2	20	1	REC - EXTERIOR	32
33	DOOR HARDWARE	1	20	2	12	12	3/4"	1.3		2.5		1.3	3/4"	12	12	2	20	1	DOOR HARDWARE	34
35	REC - A123	1	20	2	12	12	3/4"	0.7			1.7	1.0	3/4"	12	12	2	20	1	REC - A123 (TREAD MILL)	36
37	REC - A123 (TREAD MILL)	1	20	2	12	12	3/4"	1.0	2.0			1.0	3/4"	12	12	2	20	1	REC - A123 (TREAD MILL)	38
39	HANDS FREE FAUCET / FLUSH VALVE	1	20	2	12	12	3/4"	1.2		2.0		0.8	3/4"	12	12	2	20	1	HANDS FREE FAUCET / FLUSH VALVE	40
41	HANDS FREE FAUCET / FLUSH VALVE	1	20	2	12	12	3/4"	0.8			1.7	0.9	3/4"	12	12	2	20	1	HANDS FREE FAUCET / FLUSH VALVE	42
								TOTAL KVA/PHASE	9.7	12.6	10.7									
								TOTAL KVA SECTION 1		33.0										
								TOTAL KVA SECTION 2		1.7										
								TOTAL KVA		34.7										
								TOTAL AMPS PANEL		96										

PANEL: LC SECTION 2 BUS AMP: 200A AMPS MAIN BREAKER: MLO

MOUNTING: SURFACE PHASE: 3 WIRE: 4 VOLTAGE: 208/120 AIC: 18,000

CKT	CIRCUIT DESCRIPTION	BREAKER P	BREAKER AMP	WIRE NO	WIRE SIZE	GND SIZE	COND	LOAD KVA	KVA/PH A	KVA/PH B	KVA/PH C	LOAD KVA	COND	GND SIZE	WIRE SIZE	WIRE NO	BREAKER AMP	BREAKER P	CIRCUIT DESCRIPTION	CKT
43	HANDS FREE FAUCET / FLUSH VALVE	1	20	2	12	12	3/4"	0.6	0.6			0.0					20	1	SPARE	44
45	TV RECEPTACLES - A123	1	20	2	12	12	3/4"	0.4		0.4		0.0					20	1	SPARE	46
47	REC - A126	1	20	2	12	12	3/4"	0.7			0.7	0.0					20	1	SPARE	48
49	IDU - A121 & A122	2	15	2	12	12	3/4"	0.3	0.3			0.0					20	1	SPARE	50
51								0.3		0.3		0.0					20	1	SPARE	52
53	IDU - A123	2	15	2	12	12	3/4"	0.2			0.2	0.0					20	1	SPARE	54
55								0.2	0.2			0.0					20	1	SPARE	56
57	IDU - A119, A134, A138, & A140	2	15	2	12	12	3/4"	0.2		0.2		0.0					20	1	SPARE	58
59								0.2			0.2	0.0					20	1	SPARE	60
61	HRU - A120	2	15	2	12	12	3/4"	0.3	0.3			0.0					20	1	SPARE	62
63								0.3		0.3		0.0					20	1	SPARE	64
65	IDU - A124, A125, & A126	2	15	2	12	12	3/4"	0.2			0.2	0.0					20	1	SPARE	66
67								0.2	0.2			0.0					20	1	SPARE	68
69	IDU - A135 & A136	2	15	2	12	12	3/4"	0.1		0.1		0.0					20	1	SPARE	70
71								0.1			0.1	0.0						1	PREPARED SPACE	72
73	PREPARED SPACE	1						0.0	0.0			0.0						1	PREPARED SPACE	74
75	PREPARED SPACE	1						0.0		0.0		0.0						1	PREPARED SPACE	76
77	PREPARED SPACE	1						0.0			0.0	0.0						1	PREPARED SPACE	78
79	PREPARED SPACE	1						0.0	0.0			0.0						1	PREPARED SPACE	80
81	PREPARED SPACE	1						0.0		0.0		0.0						1	PREPARED SPACE	82
83	PREPARED SPACE	1						0.0			0.0	0.0						1	PREPARED SPACE	84
								TOTAL KVA/PHASE	1.5	1.2	1.4									
								TOTAL KVA PANEL		4.2										
								TOTAL AMPS PANEL		12										

ALTERNATE BID

PANEL: LD SECTION 1 BUS AMP: 200A AMPS MAIN BREAKER: 175A

MOUNTING: SURFACE PHASE: 3 WIRE: 4 VOLTAGE: 208/120 AIC: 18,000

CKT	CIRCUIT DESCRIPTION	BREAKER P	BREAKER AMP	WIRE NO	WIRE SIZE	GND SIZE	COND	LOAD KVA	KVA/PH A	KVA/PH B	KVA/PH C	LOAD KVA	COND	GND SIZE	WIRE SIZE	WIRE NO	BREAKER AMP	BREAKER P	CIRCUIT DESCRIPTION	CKT
1	REC - B110	1	20	2	12	12	3/4"	0.9	1.9			1.0	3/4"	12	12	2	20	1	REC - B110	2
3	REC - B110	1	20	2	12	12	3/4"	0.8		1.3		0.5	3/4"	12	12	2	20	1	REC - B110	4
5	FLOOR REC - B110, B112	1	20	2	12	12	3/4"	0.7			1.4	0.7	3/4"	12	12	2	20	1	FLOOR REC - B110, B112	6
7	FLOOR REC - B110, B112	1	20	2	12	12	3/4"	0.7	1.3			0.5	3/4"	12	12	2	20	1	REC - B112	8
9	REC - B112	1	20	2	12	12	3/4"	0.8		1.7		0.9	3/4"	12	12	2	20	1	REC - B112	10
11	REC - B112	1	20	2	12	12	3/4"	1.0			1.5	0.5	3/4"	12	12	2	20	1	REC - B113	12
13	REC - B113	1	20	2	12	12	3/4"	0.4	0.9			0.5	3/4"	12	12	2	20	1	REC - B111	14
15	REC - B111	1	20	2	12	12	3/4"	0.4		0.9		0.5	3/4"	12	12	2	20	1	REC - B120	16
17	REC - B114, B117, B118	1	20	2	12	12	3/4"	0.5			0.7	0.2	3/4"	12	12	2	20	1	REC - B115	18
19	REC - B115	1	20	2	12	12	3/4"	0.4	0.7			0.4	3/4"	12	12	2	20	1	REC - B115	20
21	REC - B116	1	20	2	12	12	3/4"	0.9		1.4		0.5	3/4"	12	12	2	20	1	REC - B116	22
23	REC - B116	1	20	2	12	12	3/4"	0.8			1.7	0.9	3/4"	12	12	2	20	1	REC - B116	24
25	FLOOR REC - B116	1	20	2	12	12	3/4"	0.7	1.1			0.4	3/4"	12	12	2	20	1	FLOOR REC - B116	26
27	FLOOR REC - B116	1	20	2	12	12	3/4"	0.7		1.6		0.9	3/4"	12	12	2	20	1	REC - B119	28
29	REC - B119	1	20	2	12	12	3/4"	0.8			1.3	0.5	3/4"	12	12	2	20	1	REC - B119	30
31	REC - B119	1	20	2	12	12	3/4"	0.9	1.6			0.7	3/4"	12	12	2	20	1	FLOOR REC - B119	32
33	FLOOR REC - B119	1	20	2	12	12	3/4"	0.4		1.1		0.7	3/4"	12	12	2	20	1	FLOOR REC - B119	34
35	REC - EXTERIOR	1	20	2	12	12	3/4"	0.5			1.5	1.0	3/4"	12	12	2	20	1	DOOR HARDWARE	36
37	DOOR HARDWARE	1	20	2	12	12	3/4"	1.0	2.3			1.3	3/4"	12	12	2	20	1	DOOR HARDWARE	38
39	FLOOR REC - B110, B112	1	20	2	12	12	3/4"	0.7		0.9		0.2	3/4"	12	12	2	20	1	REC - B116	40
41	FLOOR REC - B110, B112	1	20	2	12	12	3/4"	0.7			0.9	0.2	3/4"	12	12	2	20	1	REC - B119	42
								TOTAL KVA/PHASE	9.7	8.9	9.1									
								TOTAL KVA SECTION 1		27.7										
								TOTAL KVA SECTION 2		0.7										
								TOTAL KVA		28.4										
								TOTAL AMPS PANEL		79										

PANEL: LD SECTION 2 BUS AMP: 200A AMPS MAIN BREAKER: MLO

MOUNTING: SURFACE PHASE: 3 WIRE: 4 VOLTAGE: 208/120 AIC: 18,000

CKT	CIRCUIT DESCRIPTION	BREAKER P	BREAKER AMP	WIRE NO	WIRE SIZE	GND SIZE	COND	LOAD KVA	KVA/PH A	KVA/PH B	KVA/PH C	LOAD KVA	COND	GND SIZE	WIRE SIZE	WIRE NO	BREAKER AMP	BREAKER P	CIRCUIT DESCRIPTION	CKT
43	IDU - B115, B116, B117, & B119	2	15	2	12	12	3/4"	0.2	1.0			0.7	3/4"	12	12	2	20	1	FLOOR - B112	44
45								0.2		1.0		0.7	3/4"	12	12	2	20	1	FLOOR - B112	46
47	IDU - B110 & B112	2	15	2	12	12	3/4"	0.2			0.9	0.7	3/4"	12	12	2	20	1	FLOOR - B112	48
49								0.2	0.3			0.2	3/4"	12	12	2	20	1	REC - B112	50
51	HRU - B120	2	15	2	12	12	3/4"	0.1		0.3		0.2	3/4"	12	12	2	20	1	REC - B110	52
53								0.1			0.5	0.4	3/4"	12	12	2	20	1	SCREEN - B110	54
55	FLOOR BOX B110	1	20	2	12	12	3/4"	0.7	0.9			0.2	3/4"	12	12	2	20	1	REC - B110	56
57	FLOOR BOX B110	1	20	2	12	12	3/4"	0.7		0.9		0.2	3/4"	12	12	2	20	1	REC - B118	58
59	FLOOR BOX B110	1	20	2	12	12	3/4"	0.7			0.7	0.0					20	1	SPARE	60
61	REC - B114	1	20	2	12	12	3/4"	0.2	0.2			0.0					20	1	SPARE	62
63	REC - UPS	1	30	2	10	10	3/4"	0.5		0.5		0.0					20	1	SPARE	64
65	SPARE	1	20					0.0			0.0	0.0					20	1	SPARE	66
67	SPARE	1	20					0.0	0.0			0.0					20	1	SPARE	68
69	SPARE	1	20					0.0		0.0		0.0					20	1	SPARE	70
71	PREPARED SPACE	1						0.0			0.0	0.0					20	1	SPARE	72
73	PREPARED SPACE	1						0.0	0.0			0.0					20	1	SPARE	74
75	PREPARED SPACE	1						0.0		0.0		0.0						1	PREPARED SPACE	76
77	PREPARED SPACE	1						0.0			0.0	0.0						1	PREPARED SPACE	78
79	PREPARED SPACE	1						0.0	0.0			0.0						1	PREPARED SPACE	80
81	PREPARED SPACE	1						0.0		0.0		0.0						1	PREPARED SPACE	82
83	PREPARED SPACE	1						0.0			0.0	0.0						1	PREPARED SPACE	84
								TOTAL KVA/PHASE	2.4	2.7	2.1									
								TOTAL KVA PANEL		7.2										
								TOTAL AMPS PANEL		20										

Professional Certification. I hereby certify that these documents were prepared or approved by me, and that I am a duly licensed professional engineer under the laws of the State of Maryland. License No. 49693, Expiration Date: 2020-07-24.

STATE OF MARYLAND KATHRYN PARFITT 49693 PROFESSIONAL ENGINEER

ALL REPORTS, PLANS SPECIFICATIONS AND COMPUTER FILES RELATING TO THIS PROJECT ARE THE PROPERTY OF CRABTREE, ROHRBAUGH & ASSOCIATES. CRABTREE ROHRBAUGH & ASSOCIATES RETAINS ALL COMMON LAW, STATUTE AND OTHER RESERVED RIGHTS INCLUDING THE COPYRIGHT THERETO. REPRODUCTION OF THE MATERIAL HERIN OR SUBSTANTIAL USE WITHOUT WRITTEN PERMISSION OF CRABTREE, ROHRBAUGH & ASSOCIATES VIOLATES THE COPYRIGHT LAWS OF THE UNITED STATES AND WILL BE SUBJECT TO LEGAL PROSECUTION.
© CRABTREE, ROHRBAUGH & ASSOCIATES, INC 2019

REVISIONS

#	MM-DD-YR	NAME	DESCRIPTION OF CHANGES
2	08/28/20	BIA	ADDENDUM 4

CRABTREE ROHRBAUGH & ASSOCIATES - ARCHITECTS
100 WEST ROAD, SUITE 402, TOWSON MD 21204 410-528-0272
MECHANICSBURG, PENNSYLVANIA CHARLOTTESVILLE, VIRGINIA WHITE SULPHUR SPRINGS, WEST VIRGINIA
www.cra-architects.com

PROPOSED NEW
WASHINGTON COUNTY PUBLIC SAFETY TRAINING CENTER
WASHINGTON COUNTY PROJECT NO. 28-266
18350 PUBLIC SAFETY PLACE
HAGERSTOWN, MD 21740

ELECTRICAL SCHEDULES

PLOT SCALE: AS INDICATED

FILENAME:

DATE: December 18, 2019

PROJECT 3089

E5.3

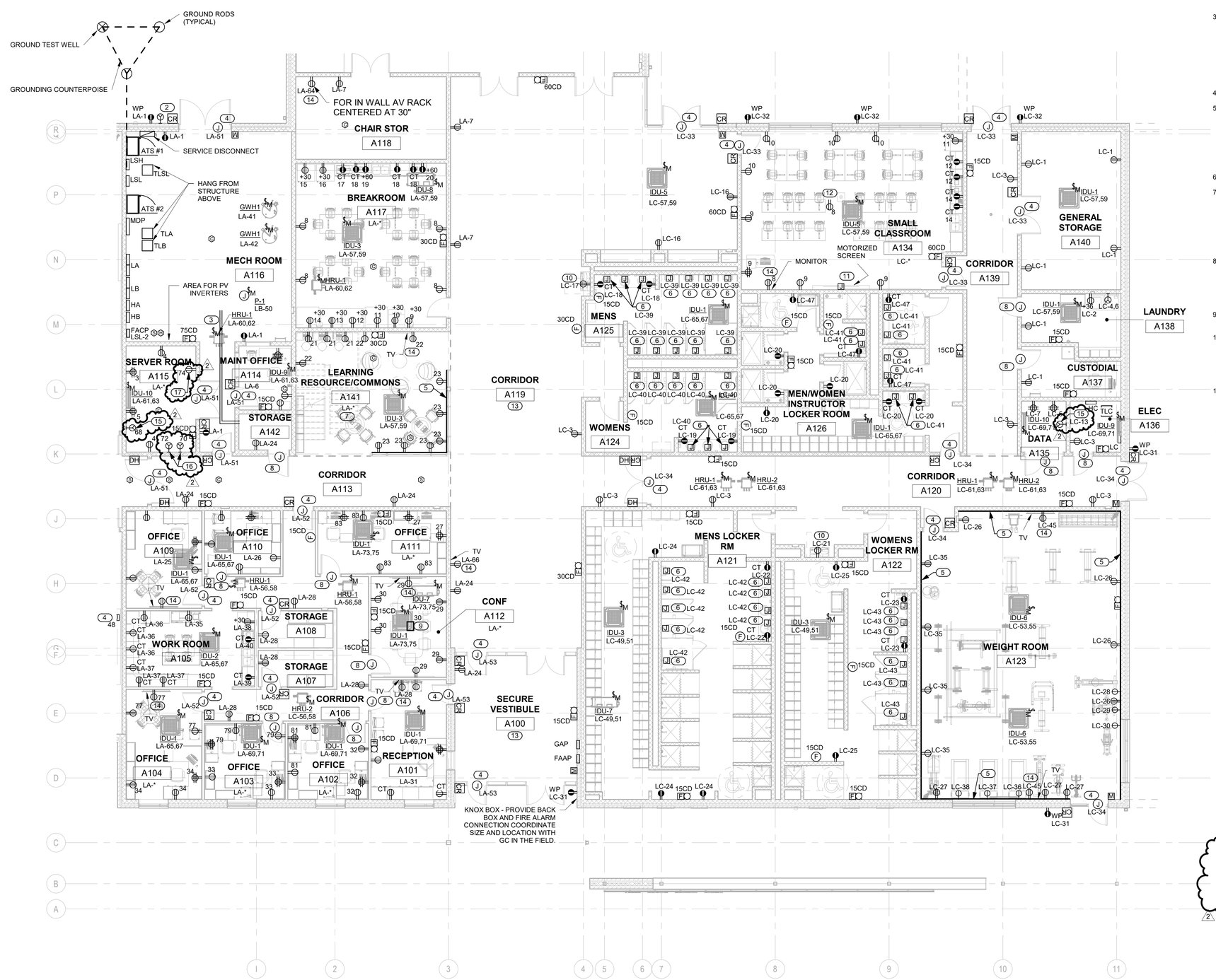

1 FIRST FLOOR PLAN - UNIT A - POWER

SCALE: 1/8" = 1'-0"

GENERAL NOTES:

1. IN OFFICE AREA PROVIDE FIRE ALARM CIRCUIT WITH 25% SPARE CAPACITY.
2. PROVIDE 1" CONDUIT TO ALL INTERIOR DOOR FRAMES THAT ARE NOT SCHEDULED TO RECEIVE ELECTRONIC HARDWARE FOR FUTURE INSTALLATION OF CARD READERS, ETC. CONDUITS TO EXTEND FROM DOOR FRAME TO POINT ABOVE THE FINISH CEILING FOR EASY INSTALLATION OF WIRING, ETC. IN THE FUTURE.
3. SEE DETAILS FOR FLOOR AND WALL PENETRATION SEALING REQUIREMENTS. WHERE CONDUIT AND WIRE PENETRATES THE WALL, THE WALL SHALL NOT ACT AS A SUPPORT. THE RACEWAY SHALL BE INDEPENDENTLY SUPPORTED ON EACH SIDE OF THE WALL. IF THE WALL PENETRATION IS NOT SEALED, PROVIDE SLEEVE TO PROTECT RACEWAY FROM DAMAGE. WALL AND FLOOR PENETRATIONS SHALL BE CUT USING HOLE SAWS OR EQUIVALENT. PENETRATION SHALL NOT HAVE JAGGED EDGES.
4. SEE DETAILS FOR CLARIFICATION OF TYPICAL CIRCUIT DESIGNATIONS.
5. PROVIDE POWER TO ALL DOORS WITH HARDWARE REQUIRING POWER CONNECTIONS. PROVIDE CONDUITS FOR ALL DOOR HARDWARE CABLING. INSTALL ALL CABLING FURNISHED BY THE DOOR HARDWARE SUPPLIER. COORDINATE WITH THE DOOR HARDWARE SUPPLIER FOR A SPECIFIC LIST OF DOORS REQUIRING POWER AND CABLING INSTALLATION. SEE DOOR HARDWARE SCHEDULE FOR MORE INFORMATION. SEE DETAILS FOR MORE INFORMATION.
6. ALL RECEPTACLES LOCATED IN CEILING SHALL FACE INTO OCCUPIED SPACE.
7. FOR ALL RECEPTACLES NOTED AS POWERING TVS OR MONITORS, COORDINATE EXACT MOUNTING HEIGHT AND LOCATION WITH INTERIOR DRAWINGS TO ENSURE RECEPTACLE AND DATA FALL BEHIND TV. RECEPTACLES INSTALLED WITHOUT PROPER COORDINATION SHALL BE RELOCATED AT NO ADDITIONAL COST TO THE OWNER. COORDINATE LOCATION OF DATA DEVICE WITH POWER BOX. BOXES SHALL BE INSTALLED DIRECTLY ADJACENT TO EACH OTHER.
8. COORDINATE THE LOCATION OF ALL RECEPTACLES LOCATED ADJACENT TO TACK BOARDS, TACKSTRIPS, AND OTHER PERMANENT WALL FIXTURES. RECEPTACLES SHALL NOT BE LOCATED BEHIND TACK BOARDS AND TACKSTRIPS. SEE ARCHITECTURAL INTERIOR DRAWINGS FOR EXACT LOCATIONS OF TACK BOARDS AND OTHER PERMANENT WALL FIXTURES.
9. COORDINATE COUNTERTOP RECEPTACLE LOCATIONS WITH CASEWORK. ENSURE RECEPTACLES ARE NOT BEHIND TALL UNITS.
10. IN AREAS WHERE THERE IS NO CEILING OR CEILING CLOUDS, ALL DEVICES, BOXES, CONDUITS, AND APPEARANCE SHALL BE PAINTABLE. ALL CONDUIT AND WIRE SHALL BE RUN TIGHT TO THE STRCTURE. ALL LABELS FOR JUNCTION BOXES, CONDUIT, AND DEVICES WHERE EVERYTHING IS PAINTED SHALL BE INSTALLED AFTER PAINTING.
11. COORDINATE LOCATION OF ALL FIRE ALARM DEVICES WITH INTERIOR DRAWINGS BEFORE ROUGH-IN. COORDINATE SPECIFICALLY WITH SOUND PANELS, MIRRORS, TACTBOARDS, AND WHITEBOARDS.

NOTES BY SYMBOL: (#)

(THIS SHEET ONLY)

1. PROVIDE TWO COMPARTMENT DIVIDED SURFACE RACEWAY NO LARGER THAN 4" HIGH ON HOLLOW METAL BASE PAINTED TO MATCH BASE. BASIS OF DESIGN: WIREMOLD AL4750.
2. PROVIDE 100A, 125/250V, 3PH, PIN AND SLEEVE RECEPTACLE. HUBBELL MODEL # M4100R12. CONFIGURATION TO MATCH MOBILE COMMAND UNIT PLUG IN WEATHER PROOF ENCLOSURE.
3. PROVIDE (1) 3" CONDUIT & (1) 1" CONDUIT FOR FUTURE ELEVATOR. PROVIDE PULL STRING.
4. PROVIDE POWER TO DOOR HARDWARE REQUIRING POWER. SEE DETAILS FOR MORE INFORMATION. CIRCUIT SHOWN SHALL BE USED BY ALL DOORS IN THE GENERAL AREA. FOR FIRE DOORS, PROVIDE SMOKE DETECTORS ON EITHER SIDE OF DOOR WITHIN 5' CONNECTED TO THE DOOR HARDWARE. CONNECT TO FIRE ALARM FOR DOOR RELEASE IN EMERGENCY.
5. PROVIDE PLUGMOLD RACEWAY WITH RECEPTACLES FINISH. SELECTED BY ARCHITECT.
6. PROVIDE 24V TRANSFORMER, POWER TO TRANSFORMER AND FINAL CONNECTION TO PLUMBING FIXTURE.
7. FOR ALL POWER WIRING FOR DEVICES IN THE CEILING OR ESLEWHERE IN THE SPACE, AN ACCESS PANEL MUST BE UTILIZED FOR ANY JUNCTION BOX LOCATIONS. THE BRANCH CIRCUIT CONDUIT SHALL BE CONCEILED BEHIND THE EPIC DECK PANELS. REFER TO EPIC DECK DETAILS ON ARCHITECTURAL PLANS FOR INSTALLATION PRACTICE FOR ELECTRICAL DEVICES AND CONDUIT. EXPOSED CONDUIT SHALL NOT BE USED.
8. PROVIDE 1"C TO DOOR FRAME AND EXTEND TO 6" ABOVE ACCESSIBLE CEILING WITH PULL STRING.
9. FLOOR BOX - PROVIDE (2) DUPLEX RECEPTACLES.
10. RECEPTACLE FOR EWC SHALL BE INSTALLED TO ENSURE IT IS COVERED BY SKIRT. COORDINATE WITH SELECTED FIXTURE.
11. PROVIDE FINAL POWER CONNECTION TO MOTORIZED SCREEN. CONTROL DEVICE PROVIDED WITH UNIT. PROVIDE ALL INTERCONNECTING WIRING.
12. PROVIDE RECEPTACLE IN CEILING FOR PROJECTOR.
13. PROVIDE COMPLETE SMOKE DETECTION COVERAGE IN THIS AREA WITH BEAM STYLE SMOKE DETECTORS.
14. REFER TO AV DRAWINGS FOR MOUNTING HEIGHTS OF OUTLETS FOR DISPLAYS.
15. PROVIDE LOCKING 30A 120V RECEPTACLE FOR UPS. COORDINATE EXACT ROOM LAYOUT IN FIELD.
16. PROVIDE (2) LOCKING 30A 120V RECEPTACLES FOR AV RACK. COORDINATE EXACT ROOM LAYOUT IN FIELD.
17. PROVIDE (1) DEDICATED 20A 120V RECEPTACLE FOR SECURITY RACK. COORDINATE EXACT ROOM LAYOUT IN FIELD.

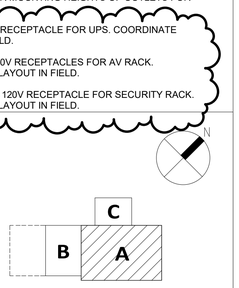

KEY PLAN

Professional Certification. I hereby certify that these documents were prepared or approved by me, and that I am a duly licensed professional engineer under the laws of the State of Maryland. License No. 49693, Expiration Date: 2020-07-24.

STATE OF MARYLAND
KATHRYN PARFITT
49693
PROFESSIONAL ENGINEER

ALL REPORTS, PLANS SPECIFICATIONS AND COMPUTER FILES RELATING TO THIS PROJECT ARE THE PROPERTY OF CRABTREE, ROHRBAUGH & ASSOCIATES. CRABTREE ROHRBAUGH & ASSOCIATES RETAINS ALL COMMON LAW, STATUTE AND OTHER RESERVED RIGHTS INCLUDING THE COPYRIGHT THERETO. REPRODUCTION OF THE MATERIAL HERIN OR SUBSTANTIAL USE WITHOUT WRITTEN PERMISSION OF CRABTREE, ROHRBAUGH & ASSOCIATES VIOLATES THE COPYRIGHT LAWS OF THE UNITED STATES AND WILL BE SUBJECT TO LEGAL PROSECUTION.
© CRABTREE, ROHRBAUGH & ASSOCIATES, INC 2019

REVISIONS

#	MM-DD-YR	NAME	DESCRIPTION OF CHANGES
2	08/28/20	BIA	ADDENDUM 4

CRABTREE ROHRBAUGH & ASSOCIATES - ARCHITECTS
100 WEST ROAD, SUITE 402, TOWSON MD 21204 410-528-0272
www.cra-architects.com
MECHANICSBURG, PENNSYLVANIA CHARLOTTESVILLE, VIRGINIA WHITE SULPHUR SPRINGS, WEST VIRGINIA

PROPOSED NEW
WASHINGTON COUNTY PUBLIC SAFETY TRAINING CENTER
WASHINGTON COUNTY PROJECT NO. 28-266
18350 PUBLIC SAFETY PLACE
HAGERSTOWN, MD 21740

FIRST FLOOR PLAN - UNIT A - POWER

PLOT SCALE: 1/8" = 1'-0"

FILENAME:

DATE: December 18, 2019

PROJECT 3089

E1.0

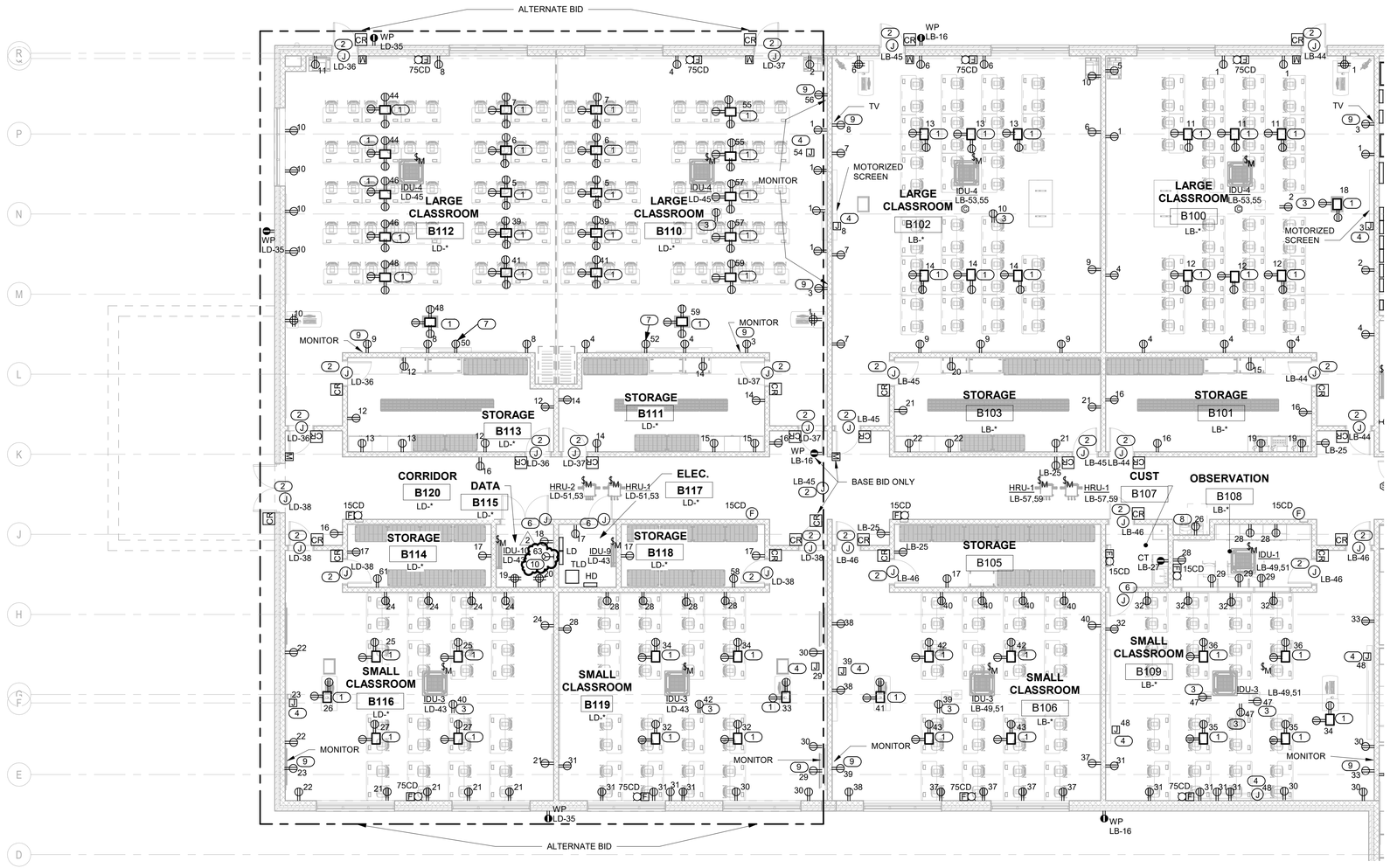

1 FIRST FLOOR PLAN - UNIT B - POWER

SCALE: 1/8" = 1'-0"

GENERAL NOTES:

1. PROVIDE 1" CONDUIT TO ALL INTERIOR DOOR FRAMES THAT ARE NOT SCHEDULED TO RECEIVE ELECTRONIC HARDWARE FOR FUTURE INSTALLATION OF CARD READERS, ETC. CONDUITS TO EXTEND FROM DOOR FRAME TO POINT ABOVE THE FINISH CEILING FOR EASY INSTALLATION OF WIRING, ETC. IN THE FUTURE.
2. SEE DETAILS FOR FLOOR AND WALL PENETRATION SEALING REQUIREMENTS. WHERE CONDUIT AND WIRE PENETRATES THE WALL, THE WALL SHALL NOT ACT AS A SUPPORT. THE RACEWAY SHALL BE INDEPENDENTLY SUPPORTED ON EACH SIDE OF THE WALL. IF THE WALL PENETRATION IS NOT SEALED, PROVIDE SLEEVE TO PROTECT RACEWAY FROM DAMAGE. WALL AND FLOOR PENETRATIONS SHALL BE CUT USING HOLE SAWS OR EQUIVALENT. PENETRATION SHALL NOT HAVE JAGGED EDGES.
3. SEE DETAILS FOR CLARIFICATION OF TYPICAL CIRCUIT DESIGNATIONS.
4. PROVIDE POWER TO ALL DOORS WITH HARDWARE REQUIRING POWER CONNECTIONS. PROVIDE CONDUITS FOR ALL DOOR HARDWARE CABLING. INSTALL ALL CABLING FURNISHED BY THE DOOR HARDWARE SUPPLIER. COORDINATE WITH THE DOOR HARDWARE SUPPLIER FOR A SPECIFIC LIST OF DOORS REQUIRING POWER AND CABLING INSTALLATION. SEE DOOR HARDWARE SCHEDULE FOR MORE INFORMATION. SEE DETAILS FOR MORE INFORMATION.
5. ALL RECEPTACLES LOCATED IN CEILING SHALL FACE INTO OCCUPIED SPACE.
6. FOR ALL RECEPTACLES NOTED AS POWERING TVS OR MONITORS, COORDINATE EXACT MOUNTING HEIGHT AND LOCATION WITH INTERIOR DRAWINGS TO ENSURE RECEPTACLE AND DATA FALL BEHIND TV. RECEPTACLES INSTALLED WITHOUT PROPER COORDINATION SHALL BE RELOCATED AT NO ADDITIONAL COST TO THE OWNER. COORDINATE LOCATION OF DATA DEVICE WITH POWER BOX. BOXES SHALL BE INSTALLED DIRECTLY ADJACENT TO EACH OTHER.
7. COORDINATE THE LOCATION OF ALL RECEPTACLES LOCATED ADJACENT TO TACK BOARDS, TACKSTRIPS, AND OTHER PERMANENT WALL FIXTURES. RECEPTACLES SHALL NOT BE LOCATED BEHIND TACK BOARDS AND TACKSTRIPS. SEE ARCHITECTURAL INTERIOR DRAWINGS FOR EXACT LOCATIONS OF TACK BOARDS AND OTHER PERMANENT WALL FIXTURES.
8. COORDINATE COUNTERTOP RECEPTACLE LOCATIONS WITH CASEWORK. ENSURE RECEPTACLES ARE NOT BEHIND TALL UNITS.
9. IN AREAS WHERE THERE IS NO CEILING OR CEILING CLOUDS, ALL DEVICES, BOXES, CONDUITS, AND APPEARANCE SHALL BE PAINTABLE. ALL CONDUIT AND WIRE SHALL BE RUN TIGHT TO THE STRCTURE. ALL LABELS FOR JUNCTION BOXES, CONDUIT, AND DEVICES WHERE EVERYTHING IS PAINTED SHALL BE INSTALLED AFTER PAINTING.
10. COORDINATE LOCATION OF ALL FIRE ALARM DEVICES WITH INTERIOR DRAWINGS BEFORE ROUGH-IN. COORDINATE SPECIFICALLY WITH SOUND PANELS, MIRRORS, TACTBOARDS, AND WHITEBOARDS.

NOTES BY SYMBOL: (#)

(THIS SHEET ONLY)

1. PROVIDE FOUR COMPARTMENT DIVIDED FLOOR BOX WITH DEVICES INDICATED. BASIS OF DESIGN: WIREMOLD EFB45 SERIES. COORDINATE EXACT LOCATION WITH ARCHITECT PRIOR TO ROUGH-IN.
2. PROVIDE POWER TO DOOR HARDWARE REQUIRING POWER. SEE DETAILS FOR MORE INFORMATION. CIRCUIT SHOWN SHALL BE USED BY ALL DOORS IN THE GENERAL AREA. FOR FIRE DOORS, PROVIDE SMOKE DETECTORS ON EITHER SIDE OF DOOR WITHIN 5' CONNECTED TO THE DOOR HARDWARE. CONNECT TO FIRE ALARM FOR DOOR RELEASE IN EMERGENCY.
3. PROVIDE CEILING MOUNTED RECEPTACLE TO POWER PROJECTOR. VERIFY EXACT LOCATION IN FIELD.
4. PROVIDE POWER FOR MOTORIZED PROJECTION SCREEN. VERIFY EXACT LOCATION IN FIELD.
5. NOT USED.
6. PROVIDE 1"C TO DOOR FRAME AND EXTEND TO 6" ABOVE ACCESSIBLE CEILING WITH PULL STRING.
7. PROVIDE RECEPTACLE FOR SHORT THROW PROJECTOR. COORDINATE EXACT MOUNTING HEIGHT IN THE FIELD.
8. RECEPTACLE FOR EWC SHALL BE INSTALLED TO ENSURE IT IS COVERED BY SKIRT. COORDINATE WITH SELECTED FIXTURE.
9. REFER TO AV DRAWINGS FOR MOUNTING HEIGHTS OF OUTLETS FOR DISPLAYS.
10. PROVIDE LOCKING 30A 120V RECEPTACLE FOR UPS. COORDINATE EXACT ROOM LAYOUT IN FIELD.

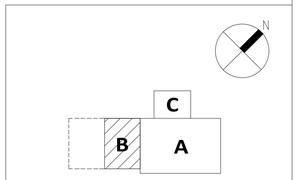

KEY PLAN

Professional Certification. I hereby certify that these documents were prepared or approved by me, and that I am a duly licensed professional engineer under the laws of the State of Maryland. License No. 49693, Expiration Date: 2020-07-24.

STATE OF MARYLAND KATHRYN PARFITT 49693 PROFESSIONAL ENGINEER

ALL REPORTS, PLANS SPECIFICATIONS AND COMPUTER FILES RELATING TO THIS PROJECT ARE THE PROPERTY OF CRABTREE, ROHRBAUGH & ASSOCIATES. CRABTREE ROHRBAUGH & ASSOCIATES RETAINS ALL COMMON LAW, STATUTE AND OTHER RESERVED RIGHTS INCLUDING THE COPYRIGHT THERETO. REPRODUCTION OF THE MATERIAL HERIN OR SUBSTANTIAL USE WITHOUT WRITTEN PERMISSION OF CRABTREE, ROHRBAUGH & ASSOCIATES VIOLATES THE COPYRIGHT LAWS OF THE UNITED STATES AND WILL BE SUBJECT TO LEGAL PROSECUTION.
© CRABTREE, ROHRBAUGH & ASSOCIATES, INC 2019

REVISIONS

#	MM-DD-YR	NAME	DESCRIPTION OF CHANGES
2	08/28/20	BIA	ADDENDUM 4

CRABTREE ROHRBAUGH & ASSOCIATES - ARCHITECTS
100 WEST ROAD, SUITE 402, TOWSON MD 21204 410-528-0272
MECHANICSBURG, PENNSYLVANIA CHARLOTTESVILLE, VIRGINIA WHITE SULPHUR SPRINGS, WEST VIRGINIA
www.cra-architects.com

PROPOSED NEW
WASHINGTON COUNTY PUBLIC SAFETY TRAINING CENTER
WASHINGTON COUNTY PROJECT NO. 28-266
18350 PUBLIC SAFETY PLACE
HAGERSTOWN, MD 21740

FIRST FLOOR PLAN - UNIT B - POWER

PLOT SCALE: 1/8" = 1'-0"

FILENAME:

DATE: December 18, 2019

PROJECT 3089

E1.1

PANEL: LA SECTION 1 BUS AMP: 200A AMPS MAIN BREAKER: 175A

MOUNTING: SURFACE PHASE: 3 WIRE: 4 VOLTAGE: 208/120 AIC: 18,000

CKT	CIRCUIT DESCRIPTION	BREAKER P	BREAKER AMP	WIRE NO	WIRE SIZE	GND SIZE	COND	LOAD KVA	KVA/PH A	KVA/PH B	KVA/PH C	LOAD KVA	COND	GND SIZE	WIRE SIZE	WIRE NO	BREAKER AMP	BREAKER P	CIRCUIT DESCRIPTION	CKT
1	REC - A116	1	20	2	12	12	3/4"	0.9	0.9			0.0					20	1	SPARE	2
3	REC - A115	1	20	2	12	12	3/4"	0.4		0.7		0.4	3/4"	12	12	2	20	1	REC - A115	4
5	REC - A115	1	20	2	12	12	3/4"	0.4			0.9	0.5	3/4"	12	12	2	20	1	REC - A114	6
7	REC - A118, A119	1	20	2	12	12	3/4"	0.5	1.3			0.7	3/4"	12	12	2	20	1	REC - A117	8
9	REC - A117	1	20	2	12	12	3/4"	0.5		1.5		1.0	3/4"	12	12	2	20	1	REC - A117 (ICE MAKER)	10
11	REC - A117 (VENDING)	1	20	2	12	12	3/4"	1.0			2.0	1.0	3/4"	12	12	2	20	1	REC - A117 (VENDING)	12
13	REC - A117 (VENDING)	1	20	2	12	12	3/4"	1.0	2.0			1.0	3/4"	12	12	2	20	1	REC - A117 (VENDING)	14
15	REC - A117 (REFRIG.)	1	20	2	12	12	3/4"	1.0		2.0		1.0	3/4"	12	12	2	20	1	REC - A117 (REFRIG.)	16
17	REC - A117 (MICRO)	1	20	2	12	12	3/4"	1.2			1.7	0.5	3/4"	12	12	2	20	1	REC - A117 (COUNTER)	18
19	REC - A117 (MICRO)	1	20	2	12	12	3/4"	1.2	2.4			1.2	3/4"	12	12	2	20	1	REC - A117 (MICRO)	20
21	REC - A113	1	20	2	12	12	3/4"	0.5		1.3		0.7	3/4"	12	12	2	20	1	REC - A113	22
23	REC - A113	1	20	2	12	12	3/4"	0.7			1.4	0.7	3/4"	12	12	2	20	1	REC - CORRIDORS	24
25	REC - A109	1	20	2	12	12	3/4"	1.1	2.2			1.1	3/4"	12	12	2	20	1	REC - A110	26
27	REC - A111	1	20	2	12	12	3/4"	0.7		1.6		0.9	3/4"	12	12	2	20	1	REC - A106, A107, A108	28
29	REC - A112	1	20	2	12	12	3/4"	0.7			1.4	0.7	3/4"	12	12	2	20	1	REC - A112	30
31	REC - A101	1	20	2	12	12	3/4"	1.1	1.8			0.7	3/4"	12	12	2	20	1	REC - A102	32
33	REC - A103	1	20	2	12	12	3/4"	1.1		1.8		0.7	3/4"	12	12	2	20	1	REC - A104	34
35	REC - A105	1	20	2	12	12	3/4"	1.0			1.5	0.5	3/4"	12	12	2	20	1	REC - A105	36
37	REC - A105	1	20	2	12	12	3/4"	0.5	1.5			1.0	3/4"	12	12	2	20	1	REC - A105 (REFRIG.) (GFI)	38
39	REC - A105	1	20	2	12	12	3/4"	0.2		1.4		1.2	3/4"	12	12	2	20	1	REC - A105 (MICRO)	40
41	GWH-1	1	20	2	12	12	3/4"	0.5			0.5	0.0	3/4"	12	12	2	20	1	GWH-1	42
								TOTAL KVA/PHASE	12.1	10.3	9.6									
								TOTAL KVA SECTION 1		31.9										
								TOTAL KVA SECTION 2		16.7										
								TOTAL KVA		48.6										
								TOTAL AMPS PANEL		135										

PANEL: LA SECTION 2 BUS AMP: 200A AMPS MAIN BREAKER: MLO

MOUNTING: SURFACE PHASE: 3 WIRE: 4 VOLTAGE: 208/120 AIC: 18,000

CKT	CIRCUIT DESCRIPTION	BREAKER P	BREAKER AMP	WIRE NO	WIRE SIZE	GND SIZE	COND	LOAD KVA	KVA/PH A	KVA/PH B	KVA/PH C	LOAD KVA	COND	GND SIZE	WIRE SIZE	WIRE NO	BREAKER AMP	BREAKER P	CIRCUIT DESCRIPTION	CKT
43	REC - C100	1	20	2	12	12	3/4"	0.7	1.4			0.7	3/4"	12	12	2	20	1	REC - C100	44
45	REC - C100	1	20	2	12	12	3/4"	0.9		1.7		0.8	3/4"	12	12	2	20	1	REC - C100	46
47	REC - C100	1	20	2	12	12	3/4"	0.4			0.7	0.4	3/4"	12	12	2	20	1	REC - C100	48
49	REC - EXTERIOR	1	20	2	12	12	3/4"	0.7	1.0			0.3	3/4"	12	12	2	20	1	DOOR HARDWARE - C-100	50
51	DOOR HARDWARE	1	20	2	12	12	3/4"	1.0		2.3		1.3	3/4"	12	12	2	20	1	DOOR HARDWARE	52
53	DOOR HARDWARE	1	20	2	12	12	3/4"	0.8			1.3	0.5	3/4"	12	12	2	20	1	FLOOR BOX	54
55	FLOOR BOX	1	20	2	12	12	3/4"	0.5	0.8			0.2	3/4"	12	12	2	15	2	HRU - A106	56
57	IDU - A117 & A141	2	15	2	12	12	3/4"	0.4		0.6		0.2								58
59								0.4			0.5	0.1	3/4"	12	12	2	15	2	HRU - A116 & A117	60
61	IDU - A114 & A115	2	15	2	12	12	3/4"	0.1	0.2			0.1								62
63								0.1		0.6		0.5	3/4"	12	12	2	20	1	REC - AV RACK RM A118	64
65	IDU - A104, A105, A109, & A110	2	15	2	12	12	3/4"	0.2			0.7	0.5	3/4"	10	10	2	30	1	REC - CORRIDOR TV	66
67								0.2	0.7			0.5	3/4"	10	10	2	30	1	UPS RACK	68
69	IDU - A101, A102, & 103	2	15	2	12	12	3/4"	0.156		0.7		0.5	3/4"	10	10	2	30	1	AV RACK	70
71								0.156			0.7	0.5	3/4"	10	10	2	30	1	AV RACK	72
73	IDU- A111 & A112	2	15	2	12	12	3/4"	0.2	0.7			0.5	3/4"	12	12	2	20	1	SECURITY RACK	74
75								0.2		0.2		0.0					20	1	SPARE	76
77	REC - A104	1	20	2	12	12	3/4"	0.5			0.5	0.0					20	1	SPARE	78
79	REC - A103	1	20	2	12	12	3/4"	0.7	1.2			0.5	3/4"	12	12	2	20	1	MOTORIZED SCREENS	80
81	REC - A102	1	20	2	12	12	3/4"	0.7		1.7		1.0	3/4"	12	12	2	20	1	ROLLER SHADES	82
83	REC - A111	1	20	2	12	12	3/4"	0.5			1.5	1.0	3/4"	12	12	2	20	1	ROLLER SHADES	84
								TOTAL KVA/PHASE	6.1	7.7	6.0									
								TOTAL KVA PANEL		19.7										
								TOTAL AMPS PANEL		55										

PANEL: LB SECTION 1 BUS AMP: 200A AMPS MAIN BREAKER: 175A

MOUNTING: SURFACE PHASE: 3 WIRE: 4 VOLTAGE: 208/120 AIC: 18,000

CKT	CIRCUIT DESCRIPTION	BREAKER P	BREAKER AMP	WIRE NO	WIRE SIZE	GND SIZE	COND	LOAD KVA	KVA/PH A	KVA/PH B	KVA/PH C	LOAD KVA	COND	GND SIZE	WIRE SIZE	WIRE NO	BREAKER AMP	BREAKER P	CIRCUIT DESCRIPTION	CKT
1	REC - B100	1	20	2	12	12	3/4"	0.7	1.3			0.5	3/4"	12	12	2	20	1	REC - B100	2
3	REC - B100	1	20	2	12	12	3/4"	1.0		1.7		0.7	3/4"	12	12	2	20	1	REC - B100	4
5	REC - B100	1	20	2	12	12	3/4"	1.0			1.7	0.7	3/4"	12	12	2	20	1	REC - B102	6
7	REC - B102	1	20	2	12	12	3/4"	0.5	1.5			1.0	3/4"	12	12	2	20	1	REC - B102	8
9	REC - B102	1	20	2	12	12	3/4"	0.7		1.7		1.0	3/4"	12	12	2	20	1	REC - B102	10
11	FLOOR REC - B100	1	20	2	12	12	3/4"	0.7			1.4	0.7	3/4"	12	12	2	20	1	FLOOR REC - B100	12
13	FLOOR REC - B102	1	20	2	12	12	3/4"	0.7	1.4			0.7	3/4"	12	12	2	20	1	FLOOR REC - B102	14
15	REC - B101	1	20	2	12	12	3/4"	0.5		0.9		0.4	3/4"	12	12	2	20	1	REC - EXTERIOR	16
17	REC - B105	1	20	2	12	12	3/4"	0.2			0.5	0.4	3/4"	12	12	2	20	1	FLOOR BOX B106	18
19	REC - B101	1	20	2	12	12	3/4"	0.4	0.9			0.5	3/4"	12	12	2	20	1	REC - B103	20
21	REC - B103	1	20	2	12	12	3/4"	0.5		0.9		0.4	3/4"	12	12	2	20	1	REC - B103	22
23	SPARE	1	20					0.0			0.0	0.0					20	1	SPARE	24
25	REC - B104	1	20	2	12	12	3/4"	0.7	1.2			0.5	3/4"	12	12	2	20	1	REC - EWC (GFI)	26
27	REC - B107	1	20	2	12	12	3/4"	0.2		0.7		0.5	3/4"	12	12	2	20	1	REC - B108	28
29	REC - B108	1	20	2	12	12	3/4"	0.5			1.1	0.5	3/4"	12	12	2	20	1	REC - B109	30
31	REC - B109	1	20	2	12	12	3/4"	0.9	1.8			0.9	3/4"	12	12	2	20	1	REC - B109	32
33	REC - B109	1	20	2	12	12	3/4"	1.0		1.4		0.4	3/4"	12	12	2	20	1	REC - B109	34
35	FLOOR REC - B109	1	20	2	12	12	3/4"	0.7			1.4	0.7	3/4"	12	12	2	20	1	FLOOR REC - B109	36
37	REC - B106	1	20	2	12	12	3/4"	0.9	1.4			0.5	3/4"	12	12	2	20	1	REC - B106	38
39	REC - B106	1	20	2	12	12	3/4"	1.0		1.9		0.9	3/4"	12	12	2	20	1	REC - B106	40
41	REC - B106	1	20	2	12	12	3/4"	0.4			1.1	0.7	3/4"	12	12	2	20	1	FLOOR REC - B106	42
								TOTAL KVA/PHASE	9.6	9.2	7.3									
								TOTAL KVA SECTION 1		26.0										
								TOTAL KVA SECTION 2		11.6										
								TOTAL KVA		37.6										
								TOTAL AMPS PANEL		104										

PANEL: LB SECTION 2 BUS AMP: 200A AMPS MAIN BREAKER: MLO

MOUNTING: SURFACE PHASE: 3 WIRE: 4 VOLTAGE: 208/120 AIC: 18,000

CKT	CIRCUIT DESCRIPTION	BREAKER P	BREAKER AMP	WIRE NO	WIRE SIZE	GND SIZE	COND	LOAD KVA	KVA/PH A	KVA/PH B	KVA/PH C	LOAD KVA	COND	GND SIZE	WIRE SIZE	WIRE NO	BREAKER AMP	BREAKER P	CIRCUIT DESCRIPTION	CKT
43	FLOOR REC - B106	1	20	2	12	12	3/4"	0.7	1.7			1.0	3/4"	12	12	2	20	1	DOOR HARDWARE	44
45	DOOR HARDWARE	1	20	2	12	12	3/4"	1.3		2.5		1.3	3/4"	12	12	2	20	1	DOOR HARDWARE	46
47	CEILING REC - PROJECTORS	1	20	2	12	12	3/4"	1.0			2.2	1.2	3/4"	12	12	2	20	1	MOTORIZED PROJECTION SCREEN	48
49	IDU - B106, B108, & B109	2	15	2	12	12	3/4"	0.2	0.7			0.5	3/4"	12	12	2	20	1	P-1	50
51								0.2		0.2		0.0					20	1	SPARE	52
53	IDU - B100 & B102	2	15	2	12	12	3/4"	0.2			0.2	0.0					20	1	SPARE	54
55								0.2	0.7			0.5	3/4"	12	12	2	20	1	C100 - MONITOR	56
57	HRU - B104	2	15	2	12	12	3/4"	0.1		0.7		0.5	3/4"	12	12	2	20	1	C100 - MONITOR	58
59								0.1			0.7	0.5	3/4"	12	12	2	20	1	C100 - MONITOR	60
61	INTERIOR LIGHTING CONTACTOR	1	20	2	12	12	3/4"	0.2	0.7			0.5	3/4"	12	12	2	20	1	C100 - MONITOR	62
63	EXTERIOR LIGHTING CONTACTOR	1	20	2	12	12	3/4"	0.2		1.3		1.1	3/4"	12	12	2	20	1	ROOF - REC	64
65	SPARE	1	20					0.0			0.0	0.0					20	1	SPARE	66
67	SPARE	1	20					0.0	0.0			0.0					20	1	SPARE	68
69	SPARE	1	20					0.0		0.0		0.0					20	1	SPARE	70
71	SPARE	1	20					0.0			0.0	0.0					20	1	SPARE	72
73	SPARE	1	20					0.0	0.0			0.0					20	1	SPARE	74
75	PREPARED SPACE	1						0.0		0.0		0.0						1	PREPARED SPACE	76
77	PREPARED SPACE	1						0.0			0.0	0.0						1	PREPARED SPACE	78
79	PREPARED SPACE	1						0.0	0.0			0.0						1	PREPARED SPACE	80
81	PREPARED SPACE	1						0.0		0.0		0.0						1	PREPARED SPACE	82
83	PREPARED SPACE	1						0.0			0.0	0.0						1	PREPARED SPACE	84
								TOTAL KVA/PHASE	3.9	4.7	3.1									
								TOTAL KVA PANEL		11.6										
								TOTAL AMPS PANEL		32										

Professional Certification. I hereby certify that these documents were prepared or approved by me, and that I am a duly Licensed Professional Engineer under the laws of the State of Maryland. License No. 49693, Expiration Date: 2020-07-24.

STATE OF MARYLAND KATHRYN PARFITT 49693 PROFESSIONAL ENGINEER

ALL REPORTS, PLANS SPECIFICATIONS AND COMPUTER FILES RELATING TO THIS PROJECT ARE THE PROPERTY OF CRABTREE, ROHRBAUGH & ASSOCIATES. CRABTREE ROHRBAUGH & ASSOCIATES RETAINS ALL COMMON LAW, STATUTE AND OTHER RESERVED RIGHTS INCLUDING THE COPYRIGHT THERETO. REPRODUCTION OF THE MATERIAL HERIN OR SUBSTANTIAL USE WITHOUT WRITTEN PERMISSION OF CRABTREE, ROHRBAUGH & ASSOCIATES VIOLATES THE COPYRIGHT LAWS OF THE UNITED STATES AND WILL BE SUBJECT TO LEGAL PROSECUTION.
© CRABTREE, ROHRBAUGH & ASSOCIATES, INC 2019

REVISIONS

#	MM-DD-YR	NAME	DESCRIPTION OF CHANGES
2	08/28/20	BIA	ADDENDUM 4

CRABTREE ROHRBAUGH & ASSOCIATES - ARCHITECTS
100 WEST ROAD, SUITE 402, TOWSON MD 21204 410-528-0272
MECHANICSBURG, PENNSYLVANIA CHARLOTTESVILLE, VIRGINIA WHITE SULPHUR SPRINGS, WEST VIRGINIA
www.cra-architects.com

PROPOSED NEW
WASHINGTON COUNTY PUBLIC SAFETY TRAINING CENTER
WASHINGTON COUNTY PROJECT NO. 28-266
18350 PUBLIC SAFETY PLACE
HAGERSTOWN, MD 21740

ELECTRICAL SCHEDULES

PLOT SCALE: AS INDICATED

FILENAME:

DATE: December 18, 2019

PROJECT 3089

E5.2

PANEL: LC SECTION 1 BUS AMP: 200A AMPS MAIN BREAKER: 175A

MOUNTING: SURFACE PHASE: 3 WIRE: 4 VOLTAGE: 208/120 AIC: 18,000

CKT	CIRCUIT DESCRIPTION	BREAKER P	BREAKER AMP	WIRE NO	WIRE SIZE	GND SIZE	COND	LOAD KVA	KVA/PH A	KVA/PH B	KVA/PH C	LOAD KVA	COND	GND SIZE	WIRE SIZE	WIRE NO	BREAKER AMP	BREAKER P	CIRCUIT DESCRIPTION	CKT
1	REC - A137, A138, & A140	1	20	2	12	12	3/4"	1.1	2.6			1.5	3/4"	12	12	2	20	1	WASHER (GFI)	2
3	REC - A139, A120	1	20	2	12	12	3/4"	1.1		3.5		2.4	3/4"	10	10	3	30	2	DRYER	4
5	REC - A135	1	20	2	12	12	3/4"	0.4			2.8	2.4								6
7	REC - A135	1	20	2	12	12	3/4"	0.4	0.9			0.5	3/4"	12	12	2	20	1	REC - A134	8
9	REC - A134	1	20	2	12	12	3/4"	0.7		1.4		0.7	3/4"	12	12	2	20	1	REC - A134	10
11	REC - A134	1	20	2	12	12	3/4"	0.7			1.4	0.4	3/4"	12	12	2	20	1	REC - A134	12
13	REC - UPS	1	30	2	10	10	3/4"	0.5	0.9			0.4	3/4"	12	12	2	20	1	REC - A134	14
15	SPARE	1	20					0.0		0.4		0.4	3/4"	12	12	2	20	1	REC - A119	16
17	REC - EWC (GFI)	1	20	2	12	12	3/4"	0.5			0.9	0.4	3/4"	12	12	2	20	1	REC - A125	18
19	REC - A124	1	20	2	12	12	3/4"	0.4	1.3			0.9	3/4"	12	12	2	20	1	REC - A126	20
21	REC - EWC (GFI)	1	20	2	12	12	3/4"	0.5		0.9		0.4	3/4"	12	12	2	20	1	REC - A121	22
23	REC - A122	1	20	2	12	12	3/4"	0.4			0.9	0.5	3/4"	12	12	2	20	1	REC - A121	24
25	REC - A122	1	20	2	12	12	3/4"	0.4	1.1			0.7	3/4"	12	12	2	20	1	REC - A123	26
27	REC - A123	1	20	2	12	12	3/4"	0.7		1.9		1.2	3/4"	12	12	2	20	1	REC - A123 (TREAD MILL)	28
29	REC - A123	1	20	2	12	12	3/4"	0.2			1.4	1.2	3/4"	12	12	2	20	1	REC - A123 (TREAD MILL)	30
31	REC - EXTERIOR	1	20	2	12	12	3/4"	0.5	1.1			0.5	3/4"	12	12	2	20	1	REC - EXTERIOR	32
33	DOOR HARDWARE	1	20	2	12	12	3/4"	1.3		2.5		1.3	3/4"	12	12	2	20	1	DOOR HARDWARE	34
35	REC - A123	1	20	2	12	12	3/4"	0.7			1.7	1.0	3/4"	12	12	2	20	1	REC - A123 (TREAD MILL)	36
37	REC - A123 (TREAD MILL)	1	20	2	12	12	3/4"	1.0	2.0			1.0	3/4"	12	12	2	20	1	REC - A123 (TREAD MILL)	38
39	HANDS FREE FAUCET / FLUSH VALVE	1	20	2	12	12	3/4"	1.2		2.0		0.8	3/4"	12	12	2	20	1	HANDS FREE FAUCET / FLUSH VALVE	40
41	HANDS FREE FAUCET / FLUSH VALVE	1	20	2	12	12	3/4"	0.8			1.7	0.9	3/4"	12	12	2	20	1	HANDS FREE FAUCET / FLUSH VALVE	42
								TOTAL KVA/PHASE	9.7	12.6	10.7									
								TOTAL KVA SECTION 1		33.0										
								TOTAL KVA SECTION 2		1.7										
								TOTAL KVA		34.7										
								TOTAL AMPS PANEL		96										

PANEL: LC SECTION 2 BUS AMP: 200A AMPS MAIN BREAKER: MLO

MOUNTING: SURFACE PHASE: 3 WIRE: 4 VOLTAGE: 208/120 AIC: 18,000

CKT	CIRCUIT DESCRIPTION	BREAKER P	BREAKER AMP	WIRE NO	WIRE SIZE	GND SIZE	COND	LOAD KVA	KVA/PH A	KVA/PH B	KVA/PH C	LOAD KVA	COND	GND SIZE	WIRE SIZE	WIRE NO	BREAKER AMP	BREAKER P	CIRCUIT DESCRIPTION	CKT
43	HANDS FREE FAUCET / FLUSH VALVE	1	20	2	12	12	3/4"	0.6	0.6			0.0					20	1	SPARE	44
45	TV RECEPTACLES - A123	1	20	2	12	12	3/4"	0.4		0.4		0.0					20	1	SPARE	46
47	REC - A126	1	20	2	12	12	3/4"	0.7			0.7	0.0					20	1	SPARE	48
49	IDU - A121 & A122	2	15	2	12	12	3/4"	0.3	0.3			0.0					20	1	SPARE	50
51								0.3		0.3		0.0					20	1	SPARE	52
53	IDU - A123	2	15	2	12	12	3/4"	0.2			0.2	0.0					20	1	SPARE	54
55								0.2	0.2			0.0					20	1	SPARE	56
57	IDU - A119, A134, A138, & A140	2	15	2	12	12	3/4"	0.2		0.2		0.0					20	1	SPARE	58
59								0.2			0.2	0.0					20	1	SPARE	60
61	HRU - A120	2	15	2	12	12	3/4"	0.3	0.3			0.0					20	1	SPARE	62
63								0.3		0.3		0.0					20	1	SPARE	64
65	IDU - A124, A125, & A126	2	15	2	12	12	3/4"	0.2			0.2	0.0					20	1	SPARE	66
67								0.2	0.2			0.0					20	1	SPARE	68
69	IDU - A135 & A136	2	15	2	12	12	3/4"	0.1		0.1		0.0					20	1	SPARE	70
71								0.1			0.1	0.0						1	PREPARED SPACE	72
73	PREPARED SPACE	1						0.0	0.0			0.0						1	PREPARED SPACE	74
75	PREPARED SPACE	1						0.0		0.0		0.0						1	PREPARED SPACE	76
77	PREPARED SPACE	1						0.0			0.0	0.0						1	PREPARED SPACE	78
79	PREPARED SPACE	1						0.0	0.0			0.0						1	PREPARED SPACE	80
81	PREPARED SPACE	1						0.0		0.0		0.0						1	PREPARED SPACE	82
83	PREPARED SPACE	1						0.0			0.0	0.0						1	PREPARED SPACE	84
								TOTAL KVA/PHASE	1.5	1.2	1.4									
								TOTAL KVA PANEL		4.2										
								TOTAL AMPS PANEL		12										

ALTERNATE BID

PANEL: LD SECTION 1 BUS AMP: 200A AMPS MAIN BREAKER: 175A

MOUNTING: SURFACE PHASE: 3 WIRE: 4 VOLTAGE: 208/120 AIC: 18,000

CKT	CIRCUIT DESCRIPTION	BREAKER P	BREAKER AMP	WIRE NO	WIRE SIZE	GND SIZE	COND	LOAD KVA	KVA/PH A	KVA/PH B	KVA/PH C	LOAD KVA	COND	GND SIZE	WIRE SIZE	WIRE NO	BREAKER AMP	BREAKER P	CIRCUIT DESCRIPTION	CKT
1	REC - B110	1	20	2	12	12	3/4"	0.9	1.9			1.0	3/4"	12	12	2	20	1	REC - B110	2
3	REC - B110	1	20	2	12	12	3/4"	0.8		1.3		0.5	3/4"	12	12	2	20	1	REC - B110	4
5	FLOOR REC - B110, B112	1	20	2	12	12	3/4"	0.7			1.4	0.7	3/4"	12	12	2	20	1	FLOOR REC - B110, B112	6
7	FLOOR REC - B110, B112	1	20	2	12	12	3/4"	0.7	1.3			0.5	3/4"	12	12	2	20	1	REC - B112	8
9	REC - B112	1	20	2	12	12	3/4"	0.8		1.7		0.9	3/4"	12	12	2	20	1	REC - B112	10
11	REC - B112	1	20	2	12	12	3/4"	1.0			1.5	0.5	3/4"	12	12	2	20	1	REC - B113	12
13	REC - B113	1	20	2	12	12	3/4"	0.4	0.9			0.5	3/4"	12	12	2	20	1	REC - B111	14
15	REC - B111	1	20	2	12	12	3/4"	0.4		0.9		0.5	3/4"	12	12	2	20	1	REC - B120	16
17	REC - B114, B117, B118	1	20	2	12	12	3/4"	0.5			0.7	0.2	3/4"	12	12	2	20	1	REC - B115	18
19	REC - B115	1	20	2	12	12	3/4"	0.4	0.7			0.4	3/4"	12	12	2	20	1	REC - B115	20
21	REC - B116	1	20	2	12	12	3/4"	0.9		1.4		0.5	3/4"	12	12	2	20	1	REC - B116	22
23	REC - B116	1	20	2	12	12	3/4"	0.8			1.7	0.9	3/4"	12	12	2	20	1	REC - B116	24
25	FLOOR REC - B116	1	20	2	12	12	3/4"	0.7	1.1			0.4	3/4"	12	12	2	20	1	FLOOR REC - B116	26
27	FLOOR REC - B116	1	20	2	12	12	3/4"	0.7		1.6		0.9	3/4"	12	12	2	20	1	REC - B119	28
29	REC - B119	1	20	2	12	12	3/4"	0.8			1.3	0.5	3/4"	12	12	2	20	1	REC - B119	30
31	REC - B119	1	20	2	12	12	3/4"	0.9	1.6			0.7	3/4"	12	12	2	20	1	FLOOR REC - B119	32
33	FLOOR REC - B119	1	20	2	12	12	3/4"	0.4		1.1		0.7	3/4"	12	12	2	20	1	FLOOR REC - B119	34
35	REC - EXTERIOR	1	20	2	12	12	3/4"	0.5			1.5	1.0	3/4"	12	12	2	20	1	DOOR HARDWARE	36
37	DOOR HARDWARE	1	20	2	12	12	3/4"	1.0	2.3			1.3	3/4"	12	12	2	20	1	DOOR HARDWARE	38
39	FLOOR REC - B110, B112	1	20	2	12	12	3/4"	0.7		0.9		0.2	3/4"	12	12	2	20	1	REC - B116	40
41	FLOOR REC - B110, B112	1	20	2	12	12	3/4"	0.7			0.9	0.2	3/4"	12	12	2	20	1	REC - B119	42
								TOTAL KVA/PHASE	9.7	8.9	9.1									
								TOTAL KVA SECTION 1		27.7										
								TOTAL KVA SECTION 2		0.7										
								TOTAL KVA		28.4										
								TOTAL AMPS PANEL		79										

PANEL: LD SECTION 2 BUS AMP: 200A AMPS MAIN BREAKER: MLO

MOUNTING: SURFACE PHASE: 3 WIRE: 4 VOLTAGE: 208/120 AIC: 18,000

CKT	CIRCUIT DESCRIPTION	BREAKER P	BREAKER AMP	WIRE NO	WIRE SIZE	GND SIZE	COND	LOAD KVA	KVA/PH A	KVA/PH B	KVA/PH C	LOAD KVA	COND	GND SIZE	WIRE SIZE	WIRE NO	BREAKER AMP	BREAKER P	CIRCUIT DESCRIPTION	CKT
43	IDU - B115, B116, B117, & B119	2	15	2	12	12	3/4"	0.2	1.0			0.7	3/4"	12	12	2	20	1	FLOOR - B112	44
45								0.2		1.0		0.7	3/4"	12	12	2	20	1	FLOOR - B112	46
47	IDU - B110 & B112	2	15	2	12	12	3/4"	0.2			0.9	0.7	3/4"	12	12	2	20	1	FLOOR - B112	48
49								0.2	0.3			0.2	3/4"	12	12	2	20	1	REC - B112	50
51	HRU - B120	2	15	2	12	12	3/4"	0.1		0.3		0.2	3/4"	12	12	2	20	1	REC - B110	52
53								0.1			0.5	0.4	3/4"	12	12	2	20	1	SCREEN - B110	54
55	FLOOR BOX B110	1	20	2	12	12	3/4"	0.7	0.9			0.2	3/4"	12	12	2	20	1	REC - B110	56
57	FLOOR BOX B110	1	20	2	12	12	3/4"	0.7		0.9		0.2	3/4"	12	12	2	20	1	REC - B118	58
59	FLOOR BOX B110	1	20	2	12	12	3/4"	0.7			0.7	0.0					20	1	SPARE	60
61	REC - B114	1	20	2	12	12	3/4"	0.2	0.2			0.0					20	1	SPARE	62
63	REC - UPS	1	30	2	10	10	3/4"	0.5		0.5		0.0					20	1	SPARE	64
65	SPARE	1	20					0.0			0.0	0.0					20	1	SPARE	66
67	SPARE	1	20					0.0	0.0			0.0					20	1	SPARE	68
69	SPARE	1	20					0.0		0.0		0.0					20	1	SPARE	70
71	PREPARED SPACE	1						0.0			0.0	0.0					20	1	SPARE	72
73	PREPARED SPACE	1						0.0	0.0			0.0					20	1	SPARE	74
75	PREPARED SPACE	1						0.0		0.0		0.0						1	PREPARED SPACE	76
77	PREPARED SPACE	1						0.0			0.0	0.0						1	PREPARED SPACE	78
79	PREPARED SPACE	1						0.0	0.0			0.0						1	PREPARED SPACE	80
81	PREPARED SPACE	1						0.0		0.0		0.0						1	PREPARED SPACE	82
83	PREPARED SPACE	1						0.0			0.0	0.0						1	PREPARED SPACE	84
								TOTAL KVA/PHASE	2.4	2.7	2.1									
								TOTAL KVA PANEL		7.2										
								TOTAL AMPS PANEL		20										

Professional Certification. I hereby certify that these documents were prepared or approved by me, and that I am a duly licensed professional engineer under the laws of the State of Maryland. License No. 49693, Expiration Date: 2020-07-24.

STATE OF MARYLAND KATHRYN PARFITT 49693 PROFESSIONAL ENGINEER

ALL REPORTS, PLANS SPECIFICATIONS AND COMPUTER FILES RELATING TO THIS PROJECT ARE THE PROPERTY OF CRABTREE, ROHRBAUGH & ASSOCIATES. CRABTREE ROHRBAUGH & ASSOCIATES RETAINS ALL COMMON LAW, STATUTE AND OTHER RESERVED RIGHTS INCLUDING THE COPYRIGHT THERETO. REPRODUCTION OF THE MATERIAL HERIN OR SUBSTANTIAL USE WITHOUT WRITTEN PERMISSION OF CRABTREE, ROHRBAUGH & ASSOCIATES VIOLATES THE COPYRIGHT LAWS OF THE UNITED STATES AND WILL BE SUBJECT TO LEGAL PROSECUTION.
© CRABTREE, ROHRBAUGH & ASSOCIATES, INC 2019

REVISIONS

#	MM-DD-YR	NAME	DESCRIPTION OF CHANGES
2	08/28/20	BIA	ADDENDUM 4

CRABTREE ROHRBAUGH & ASSOCIATES - ARCHITECTS
100 WEST ROAD, SUITE 402, TOWSON MD 21204 410-528-0272
MECHANICSBURG, PENNSYLVANIA CHARLOTTESVILLE, VIRGINIA WHITE SULPHUR SPRINGS, WEST VIRGINIA
www.cra-architects.com

PROPOSED NEW
WASHINGTON COUNTY PUBLIC SAFETY TRAINING CENTER
WASHINGTON COUNTY PROJECT NO. 28-266
18350 PUBLIC SAFETY PLACE
HAGERSTOWN, MD 21740

ELECTRICAL SCHEDULES

PLOT SCALE: AS INDICATED

FILENAME:

DATE: December 18, 2019

PROJECT 3089

E5.3

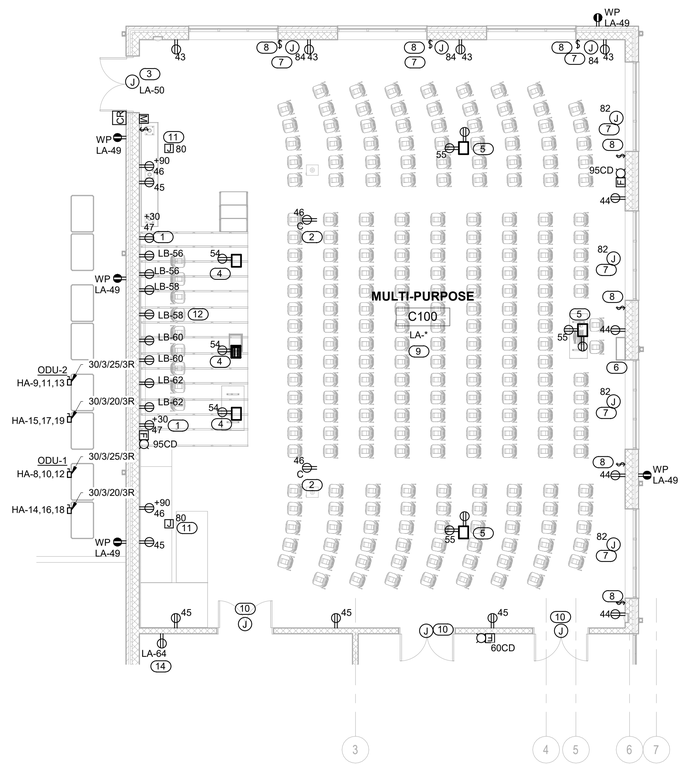

1 FIRST FLOOR PLAN - UNIT C - POWER
SCALE: 1/8" = 1'-0"

GENERAL NOTES:

1. PROVIDE 1" CONDUIT TO ALL INTERIOR DOOR FRAMES THAT ARE NOT SCHEDULED TO RECEIVE ELECTRONIC HARDWARE FOR FUTURE INSTALLATION OF CARD READERS, ETC. CONDUITS TO EXTEND FROM DOOR FRAME TO POINT ABOVE THE FINISH CEILING FOR EASY INSTALLATION OF WIRING, ETC. IN THE FUTURE.
2. SEE DETAILS FOR FLOOR AND WALL PENETRATION SEALING REQUIREMENTS. WHERE CONDUIT AND WIRE PENETRATES THE WALL, THE WALL SHALL NOT ACT AS A SUPPORT. THE RACEWAY SHALL BE INDEPENDENTLY SUPPORTED ON EACH SIDE OF THE WALL. IF THE WALL PENETRATION IS NOT SEALED, PROVIDE SLEEVE TO PROTECT RACEWAY FROM DAMAGE. WALL AND FLOOR PENETRATIONS SHALL BE CUT USING HOLE SAWS OR EQUIVALENT. PENETRATION SHALL NOT HAVE JAGGED EDGES.
3. SEE DETAILS FOR CLARIFICATION OF TYPICAL CIRCUIT DESIGNATIONS.
4. PROVIDE POWER TO ALL DOORS WITH HARDWARE REQUIRING POWER CONNECTIONS. PROVIDE CONDUITS FOR ALL DOOR HARDWARE CABLING. INSTALL ALL CABLING FURNISHED BY THE DOOR HARDWARE SUPPLIER. COORDINATE WITH THE DOOR HARDWARE SUPPLIER FOR A SPECIFIC LIST OF DOORS REQUIRING POWER AND CABLING INSTALLATION. SEE DOOR HARDWARE SCHEDULE FOR MORE INFORMATION. SEE DETAILS FOR MORE INFORMATION.
5. ALL RECEPTACLES LOCATED IN CEILING SHALL FACE INTO OCCUPIED SPACE.
6. FOR ALL RECEPTACLES NOTED AS POWERING TVS OR MONITORS, COORDINATE EXACT MOUNTING HEIGHT AND LOCATION WITH INTERIOR DRAWINGS TO ENSURE RECEPTACLE AND DATA FALL BEHIND TV. RECEPTACLES INSTALLED WITHOUT PROPER COORDINATION SHALL BE RELOCATED AT NO ADDITIONAL COST TO THE OWNER. COORDINATE LOCATION OF DATA DEVICE WITH POWER BOX. BOXES SHALL BE INSTALLED DIRECTLY ADJACENT TO EACH OTHER.
7. COORDINATE THE LOCATION OF ALL RECEPTACLES LOCATED ADJACENT TO TACK BOARDS, TACKSTRIPS, AND OTHER PERMANENT WALL FIXTURES. RECEPTACLES SHALL NOT BE LOCATED BEHIND TACK BOARDS AND TACKSTRIPS. SEE ARCHITECTURAL INTERIOR DRAWINGS FOR EXACT LOCATIONS OF TACK BOARDS AND OTHER PERMANENT WALL FIXTURES.
8. COORDINATE COUNTERTOP RECEPTACLE LOCATIONS WITH CASEWORK. ENSURE RECEPTACLES ARE NOT BEHIND TALL UNITS.
9. IN AREAS WHERE THERE IS NO CEILING OR CEILING CLOUDS, ALL DEVICES, BOXES, CONDUITS, AND APPEARANCE SHALL BE PAINTABLE. ALL CONDUIT AND WIRE SHALL BE RUN TIGHT TO THE STRCTURE. ALL LABELS FOR JUNCTION BOXES, CONDUIT, AND DEVICES WHERE EVERYTHING IS PAINTED SHALL BE INSTALLED AFTER PAINTING.
10. COORDINATE LOCATION OF ALL FIRE ALARM DEVICES WITH INTERIOR DRAWINGS BEFORE ROUGH-IN. COORDINATE SPECIFICALLY WITH SOUND PANELS, MIRRORS, TACTBOARDS, AND WHITEBOARDS.

NOTES BY SYMBOL: (#)

(THIS SHEET ONLY)

1. MOUNT RECEPTACLE ABOVE MOVABLE STAGE 30" ABOVE CONCRETE FLOOR.
2. PROVIDE STRUCTURE MOUNTED RECEPTACLE TO POWER PROJECTOR. VERIFY EXACT LOCATION IN FIELD.
3. PROVIDE POWER TO DOOR HARDWARE REQUIRING POWER. SEE DETAILS FOR MORE INFORMATION. CIRCUIT SHOWN SHALL BE USED BY ALL DOORS IN THE GENERAL AREA.
4. PROVIDE SIX COMPARTMENT DIVIDED FLOOR BOX WITH DEVICES INDICATED. BASIS OF DESIGN: WIREMOLD EFB6 SERIES. COORDINATE EXACT LOCATION WITH ARCHITECT PRIOR TO ROUGH-IN.
5. PROVIDE SIX COMPARTMENT DIVIDED FLOOR BOX WITH DEVICES INDICATED. BASIS OF DESIGN: WIREMOLD EFB65 SERIES. COORDINATE EXACT LOCATION WITH ARCHITECT PRIOR TO ROUGH-IN.
6. SHADE CONTROL PANEL INSTALLED BY THE G.C.. REFER TO TYPICAL ROLLER SHADE CONTROLLER WIRING DIAGRAM ON DETAILS DRAWINGS FOR EXACT REQUIREMENTS.
7. FOR ROLLER SHADE- CONNECT TO NEAREST ROLLER SHADE CONTROL PANEL LOCATED ABOVE CEILING AND INSTALLED BY G.C.. WIRING DETAILS VARY BY MANUFACTURER. COORDINATE WITH SELECTED PRODUCT.
8. ROLLER SHADE MANUAL OVERRIDE SWITCH PRIVIDED BY G.C., INSTALLED BY E.C., (REFER TO TYPICAL ROLLER SHADE CONTROLLER WIRING DIAGRAM ON DETAILS DRAWINGS FOR EXACT REQUIREMENTS)
9. FOR ALL POWER WIRING FOR DEVICES IN THE CEILING OR ESLEWHERE IN THE SPACE, AN ACCESS PANEL MUST BE UTILIZED FOR ANY JUNCTION BOX LOCATIONS. THE BRANCH CIRCUIT CONDUIT SHALL BE CONCEILED BEHIDN THE EPIC DECK PANELS. REFER TO EPIC DECK DETAILS ON ARCHITECTURAL PLANS FOR INSTALLATION PRACTICE FOR ELECTRICAL DEVICES AND CONDUIT. EXPOSED CONDUIT SHALL NOT BE USED.
10. PROVIDE 1"C TO DOOR FRAME AND EXTEND TO 6" ABOVE ACCESSIBLE CEILING WITH PULL STRING.
11. PROVIDE POWER FOR MOTORIZED PROJECTION SCREEN. VERIFY EXACT LOCATION IN FIELD.
12. PROVIDE (8) DUPLEX RECEPTACLES FOR FLAT PANEL MONITORS. COORDINATE MOUNTING HEIGHT & LOCATION IN THE FIELD.

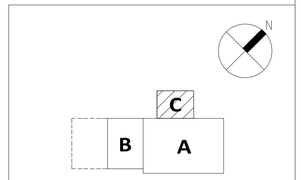

KEY PLAN

Professional Certification. I hereby certify that these documents were prepared or approved by me, and that I am a duly licensed professional engineer under the laws of the State of Maryland. License No. 49693, Expiration Date: 2020-07-24.

STATE OF MARYLAND
KATHRYN PARETTI
49693
PROFESSIONAL ENGINEER

ALL REPORTS, PLANS SPECIFICATIONS AND COMPUTER FILES RELATING TO THIS PROJECT ARE THE PROPERTY OF CRABTREE, ROHRBAUGH & ASSOCIATES. CRABTREE ROHRBAUGH & ASSOCIATES RETAINS ALL COMMON LAW, STATUTE AND OTHER RESERVED RIGHTS INCLUDING THE COPYRIGHT THERETO. REPRODUCTION OF THE MATERIAL HERIN OR SUBSTANTIAL USE WITHOUT WRITTEN PERMISSION OF CRABTREE, ROHRBAUGH & ASSOCIATES VIOLATES THE COPYRIGHT LAWS OF THE UNITED STATES AND WILL BE SUBJECT TO LEGAL PROSECUTION.
© CRABTREE, ROHRBAUGH & ASSOCIATES, INC 2019

REVISIONS

#	MM-DD-YR	NAME	DESCRIPTION OF CHANGES

CRABTREE ROHRBAUGH & ASSOCIATES -
ARCHITECTS
100 WEST ROAD, SUITE 402, TOWSON MD 21204 410-528-0272
www.cra-architects.com
MECHANICSBURG, PENNSYLVANIA CHARLOTTESVILLE, VIRGINIA WHITE SULPHUR SPRINGS, WEST VIRGINIA

PROPOSED NEW
WASHINGTON COUNTY PUBLIC SAFETY TRAINING CENTER
WASHINGTON COUNTY PROJECT NO. 28-266
18350 PUBLIC SAFETY PLACE
HAGERSTOWN, MD 21740

CR

FIRST FLOOR PLAN - UNIT C - POWER

PLOT SCALE: 1/8" = 1'-0"

FILENAME:

DATE: December 18, 2019

PROJECT
3089

E1.2

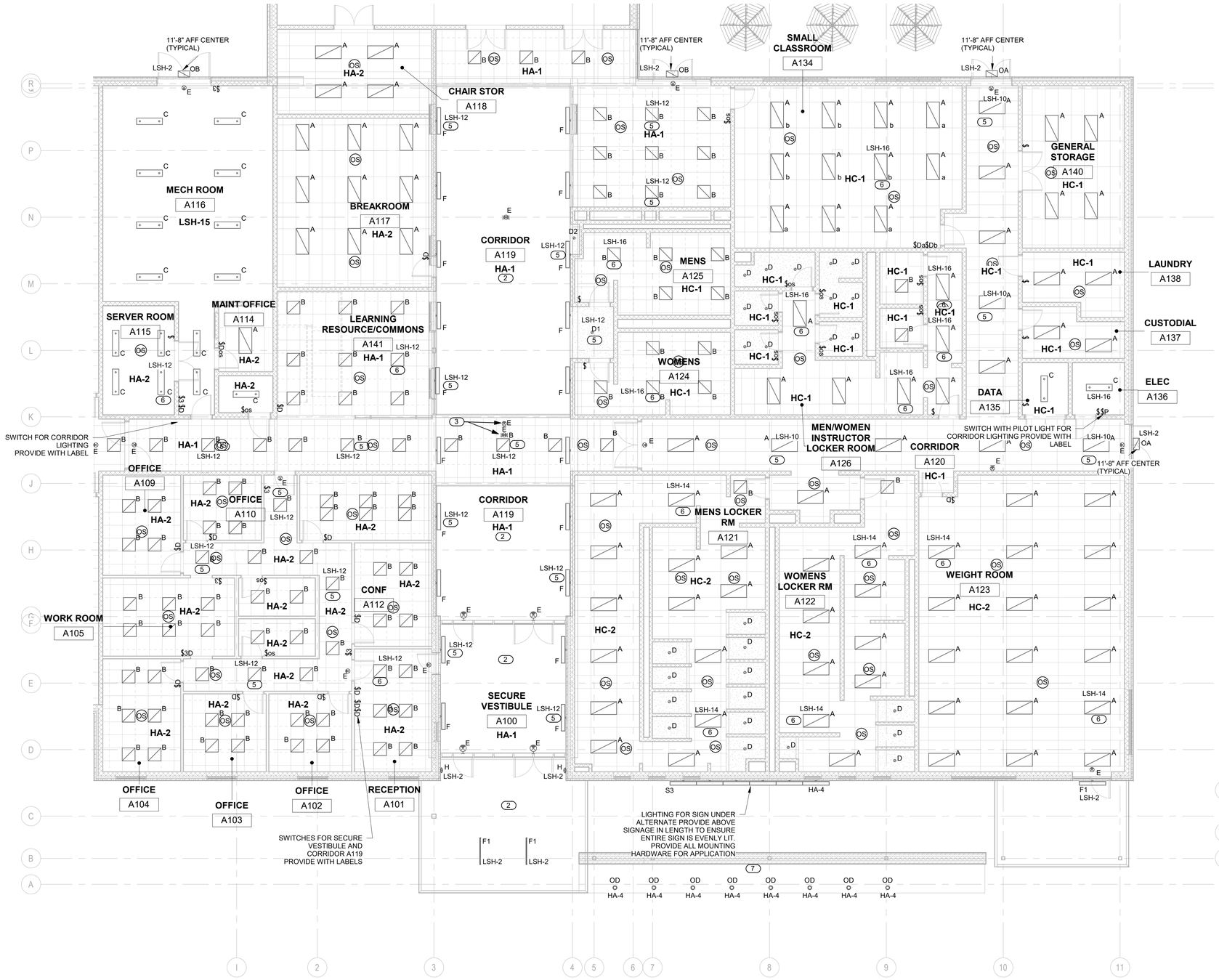

1 FIRST FLOOR PLAN - UNIT A - LIGHTING
SCALE: 1/8" = 1'-0"

GENERAL NOTES:

1. CONNECT ALL EXIT SIGNS AND EMERGENCY BATTERY UNITS TO UNSWITCHED LEG OF LIGHTING CIRCUIT SERVING THE SAME AREA WITH 2#12 & 1#12GRD IN 3/4"C.
2. CONNECT ALL EXIT SIGNS TO LSH-11.
3. ALL EXTERIOR LIGHTING SHALL BE RUN THROUGH A LIGHTING CONTACTOR FOR CONTROL.

NOTES BY SYMBOL: (#)

(THIS SHEET ONLY)

1. NOT USED.
2. IN SECURE VESTIBULE A100, CORRIDOR A119 & UPPER EXTIOR CANOPY, RUN ALL CONDUITS AND WIRING ABOVE CONCEALED CEILING. WHERE NOT POSSIBLE, ROUTING SHALL BE APPROVED BY THE ARCHITECT BEFORE INSTALLATION. ALL DEVICES, BOXES, CONDUITS, AND APPURTANCES SHALL BE PAINTABLE. ALL CONDUIT AND WIRE SHALL BE RUN TIGHT TO THE STRUCTURE.
3. MOUNT LIGHT FIXTURES TYPE D1 AND EXIT SIGNS TO UNDER SIDE OF GRID.
4. FOR ALL CEILING/DECK MOUNTED FIXTURES, AN ACCESS PANEL MUST BE UTILIZED FOR ANY JUNCTION BOX LOCATIONS. THE BRANCE CIRCUIT CONDUIT SHALL BE CONCEALED BEHIND THE EPIC DECK PANELS. REFER TO EPIC DECK DETAILS ON ARCHITECTURAL PLANS FOR INSTALLATION PRACTICES FOR ELECTRICAL DEVICES AND CONDUIT. EXPOSED CONDUIT SHALL NOT BE USED.
5. FIXTURE ON 24/7 FOR SAFETY AND SECURITY.
6. PROVIDE EMERGENCY LIGHTING CONTROL DEVICE TO ENSURE FIXTURE AUTOMATICALLY ILLUMINATES UNDER EMERGENCY AND IS NORMALLY CONTROLLED THE SAME.
7. PROVIDE IN GROUND LIGHTING IN 1 CUBIC FOOT OF CONCRETE. AIM FIXTURES IN THE FIELD. PLACEMENT SHALL BE AS PER SELECTED MANUFACTURER'S RECOMMENDATIONS TO EVENLY LIGHT SIGN.

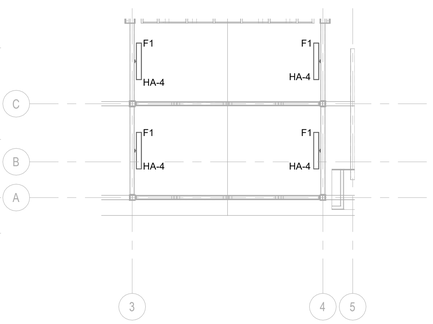

2 UPPER CANOPY PLAN - LIGHTING
SCALE: 1/8" = 1'-0"

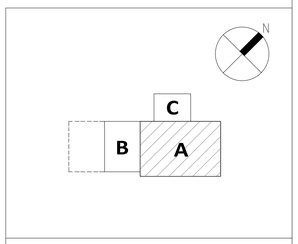

KEY PLAN

Professional Certification. I hereby certify that these documents were prepared or approved by me, and that I am a duly licensed professional engineer under the laws of the State of Maryland. License No. 49693, Expiration Date: 2020-07-24.

STATE OF MARYLAND
KATHRYN PARFITT
49693
PROFESSIONAL ENGINEER

ALL REPORTS, PLANS SPECIFICATIONS AND COMPUTER FILES RELATING TO THIS PROJECT ARE THE PROPERTY OF CRABTREE, ROHRBAUGH & ASSOCIATES. CRABTREE ROHRBAUGH & ASSOCIATES RETAINS ALL COMMON LAW, STATUTE AND OTHER RESERVED RIGHTS INCLUDING THE COPYRIGHT THERETO. REPRODUCTION OF THE MATERIAL HERIN OR SUBSTANTIAL USE WITHOUT WRITTEN PERMISSION OF CRABTREE, ROHRBAUGH & ASSOCIATES VIOLATES THE COPYRIGHT LAWS OF THE UNITED STATES AND WILL BE SUBJECT TO LEGAL PROSECUTION.
© CRABTREE, ROHRBAUGH & ASSOCIATES, INC 2019

REVISIONS

#	MM-DD-YR	NAME	DESCRIPTION OF CHANGES

CRABTREE ROHRBAUGH & ASSOCIATES - ARCHITECTS
100 WEST ROAD, SUITE 402, TOWSON MD 21204 410-528-0272
MECHANICSBURG, PENNSYLVANIA CHARLOTTESVILLE, VIRGINIA WHITE SULPHUR SPRINGS, WEST VIRGINIA
www.cra-architects.com

PROPOSED NEW
WASHINGTON COUNTY PUBLIC SAFETY TRAINING CENTER
WASHINGTON COUNTY PROJECT NO. 28-266
18350 PUBLIC SAFETY PLACE
HAGERSTOWN, MD 21740

FIRST FLOOR PLAN - UNIT A - LIGHTING

PLOT SCALE: 1/8" = 1'-0"

FILENAME:

DATE: December 18, 2019

PROJECT 3089

E2.0

1 FIRST FLOOR PLAN - UNIT B - LIGHTING
SCALE: 1/8" = 1'-0"

NOTES BY SYMBOL: (#)
(THIS SHEET ONLY)

1. NOT USED
2. FIXTURE ON 24/7 FOR SAFETY AND SECURITY.
3. PROVIDE EMERGENCY LIGHTING CONTROL DEVICE TO ENSURE FIXTURE AUTOMATICALLY ILLUMINATES UNDER EMERGENCY AND IS NORMALLY CONTROLLED THE SAME.

GENERAL NOTES:

1. CONNECT ALL EXIT SIGNS TO LSH-13
2. ALL EXTERIOR LIGHTING SHALL BE RUN THROUGH A LIGHTING CONTACTOR FOR CONTROL.

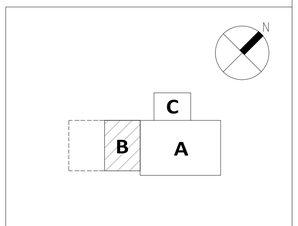

KEY PLAN

Professional Certification. I hereby certify that these documents were prepared or approved by me, and that I am a duly licensed professional engineer under the laws of the State of Maryland. License No. 49693, Expiration Date: 2020-07-24.

STATE OF MARYLAND
KATHRYN PARFITT
49693
PROFESSIONAL ENGINEER

ALL REPORTS, PLANS SPECIFICATIONS AND COMPUTER FILES RELATING TO THIS PROJECT ARE THE PROPERTY OF CRABTREE, ROHRBAUGH & ASSOCIATES. CRABTREE ROHRBAUGH & ASSOCIATES RETAINS ALL COMMON LAW, STATUTE AND OTHER RESERVED RIGHTS INCLUDING THE COPYRIGHT THERETO. REPRODUCTION OF THE MATERIAL HERIN OR SUBSTANTIAL USE WITHOUT WRITTEN PERMISSION OF CRABTREE, ROHRBAUGH & ASSOCIATES VIOLATES THE COPYRIGHT LAWS OF THE UNITED STATES AND WILL BE SUBJECT TO LEGAL PROSECUTION.
© CRABTREE, ROHRBAUGH & ASSOCIATES, INC 2019

REVISIONS

#	MM-DD-YR	NAME	DESCRIPTION OF CHANGES

CRABTREE ROHRBAUGH & ASSOCIATES - ARCHITECTS
100 WEST ROAD, SUITE 402, TOWSON MD 21204 410-528-0272
www.cra-architects.com
MECHANICSBURG, PENNSYLVANIA CHARLOTTESVILLE, VIRGINIA WHITE SULPHUR SPRINGS, WEST VIRGINIA

PROPOSED NEW
WASHINGTON COUNTY PUBLIC SAFETY TRAINING CENTER
WASHINGTON COUNTY PROJECT NO. 28-266
18350 PUBLIC SAFETY PLACE
HAGERSTOWN, MD 21740

FIRST FLOOR PLAN - UNIT B - LIGHTING

PLOT SCALE: 1/8" = 1'-0"

FILENAME:

DATE: December 18, 2019

PROJECT 3089

E2.1

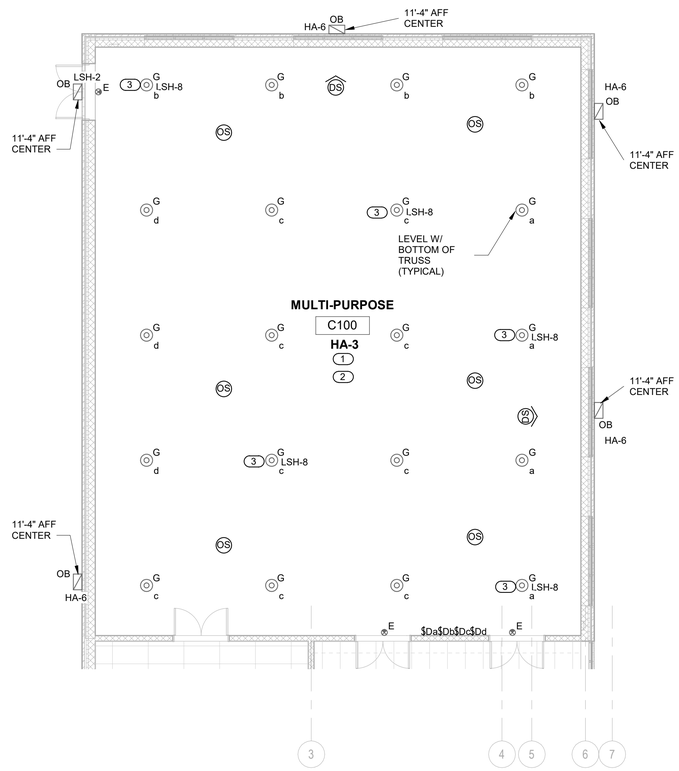

1 FIRST FLOOR PLAN - UNIT C - LIGHTING

SCALE: 1/8" = 1'-0"

NOTES BY SYMBOL: (#)
(THIS SHEET ONLY)

1. IN MULTI-PURPOSE ROOM, ROUTING SHALL BE APPROVED BY THE ARCHITECT BEFORE INSTALLATION. ALL DEVICES, BOXES, CONDUITS, AND APPURTANCES SHALL BE PAINTABLE. ALL CONDUIT AND WIRE SHALL BE RUN TIGHT TO THE STRUCTURE.

2. FOR ALL CEILING/DECK MOUNTED FIXTURES, AN ACCESS PANEL MUST BE UTILIZED FOR ANY JUNCTION BOX LOCATIONS. THE BRANCE CIRCUIT CONDUIT SHALL BE CONCEALED BEHIND THE EPIC DECK PANELS. REFER TO EPIC DECK DETAILS ON ARCHITECTURAL PLANS FOR INSTALLATION PRACTICES FOR ELECTRICAL DEVICES AND CONDUIT. EXPOSED CONDUIT SHALL NOT BE USED.

3. PROVIDE EMERGENCY LIGHTING CONTROL DEVICE TO ENSURE FIXTURE AUTOMATICALLY ILLUMINATES UNDER EMERGENCY AND IS NORMALLY CONTROLLED THE SAME.

GENERAL NOTES:

1. CONNECT ALL EXIT SIGNS ONTO ONE CIRCUIT ON PANEL LSL

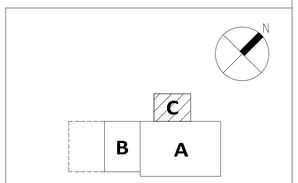

KEY PLAN

Professional Certification. I hereby certify that these documents were prepared or approved by me, and that I am a duly licensed professional engineer under the laws of the State of Maryland. License No. 49693, Expiration Date: 2020-07-24.

STATE OF MARYLAND
KATHRYN PARFITT
49693
PROFESSIONAL ENGINEER

ALL REPORTS, PLANS SPECIFICATIONS AND COMPUTER FILES RELATING TO THIS PROJECT ARE THE PROPERTY OF CRABTREE, ROHRBAUGH & ASSOCIATES. CRABTREE ROHRBAUGH & ASSOCIATES RETAINS ALL COMMON LAW, STATUTE AND OTHER RESERVED RIGHTS INCLUDING THE COPYRIGHT THERETO. REPRODUCTION OF THE MATERIAL HERIN OR SUBSTANTIAL USE WITHOUT WRITTEN PERMISSION OF CRABTREE, ROHRBAUGH & ASSOCIATES VIOLATES THE COPYRIGHT LAWS OF THE UNITED STATES AND WILL BE SUBJECT TO LEGAL PROSECUTION.
© CRABTREE, ROHRBAUGH & ASSOCIATES, INC 2019

REVISIONS

#	MM-DD-YR	NAME	DESCRIPTION OF CHANGES

CRABTREE ROHRBAUGH & ASSOCIATES - ARCHITECTS
100 WEST ROAD, SUITE 402, TOWSON MD 21204 410-528-0272
www.cra-architects.com
MECHANICSBURG, PENNSYLVANIA CHARLOTTESVILLE, VIRGINIA WHITE SULPHUR SPRINGS, WEST VIRGINIA

PROPOSED NEW
WASHINGTON COUNTY PUBLIC SAFETY TRAINING CENTER
WASHINGTON COUNTY PROJECT NO. 28-266
18350 PUBLIC SAFETY PLACE
HAGERSTOWN, MD 21740

FIRST FLOOR PLAN - UNIT C - LIGHTING

PLOT SCALE: 1/8" = 1'-0"

FILENAME:

DATE: December 18, 2019

PROJECT
3089

E2.2

PV SYSTEM NOTES:

1. SEE SPECIFICATION FOR MORE INFORMATION.
2. BASIS OF DESIGN: 390 PANELS SUNPOWER X22-360-COM. 13 PANELS MAX PER STRING, MAXIMUM OF 4 STRINGS PER SCHNEIDER ELECTRIC #25000E INVERTER WITH A COMBINER BOX PER INVERTER.
3. INVERTERS SHALL BE EITHER RACK MOUNTED OR LOCATED IN THE NEAREST ELECTRICAL/STORAGE/IDF/CUSTODIAN ROOM.
4. FLAT ROOF RACKING SYSTEM SHALL BE SUNPOWER HELIX ST OR EQUAL BALLASTED SYSTEM.
5. INSTALLATION SHALL COMPLY WITH THE PROVISIONS OF NFPA 1, SECTION 11.12.

GENERAL NOTES:

1. PROVIDE FULL LIGHTNING PROTECTION SYSTEM. COORDINATE WITH ROOF TYPE AND LOCATION OF ALL ROOF MOUNTED EQUIPMENT. SEE SPECIFICATION FOR MORE INFORMATION.

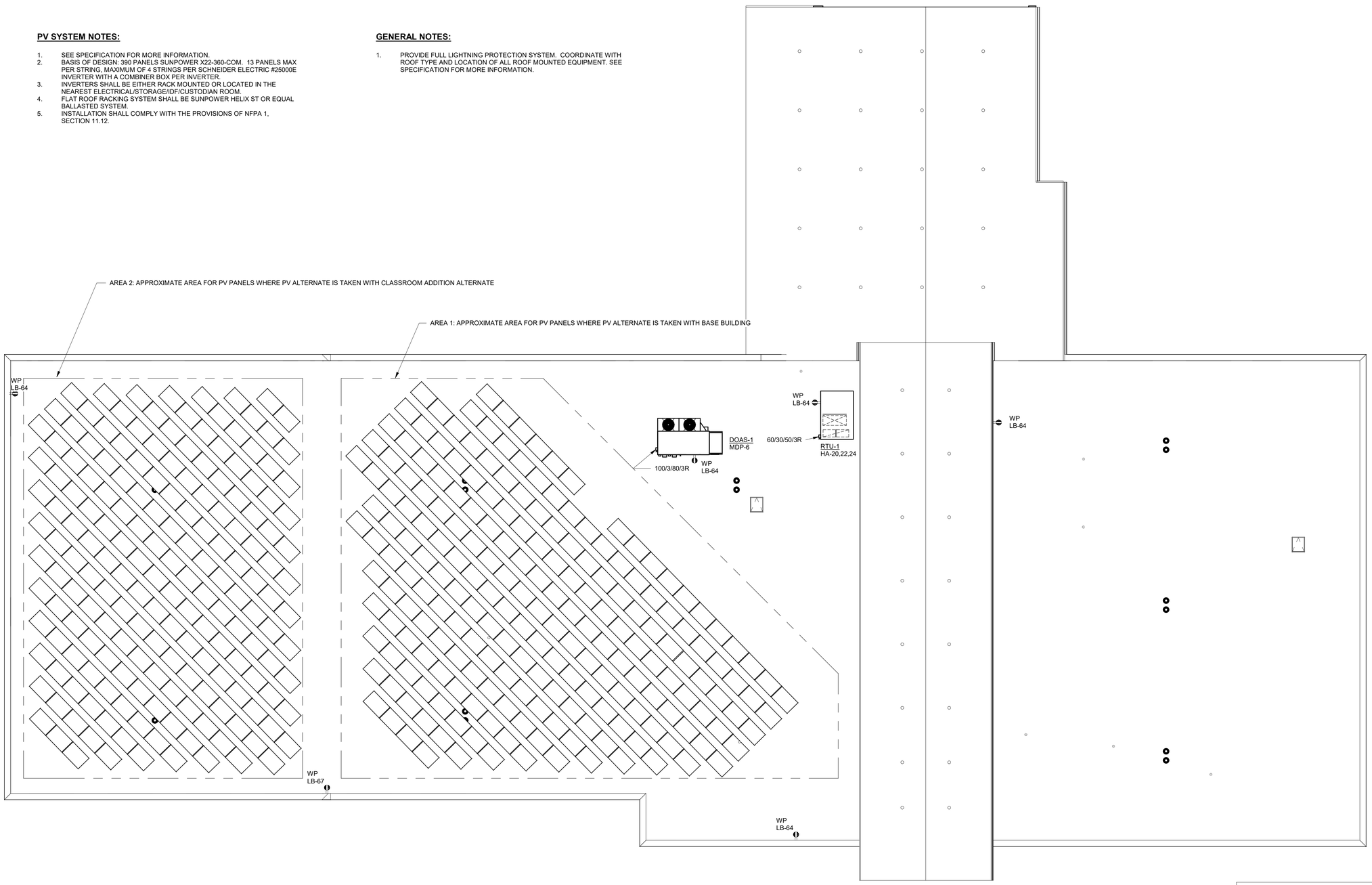

1 ROOF PLAN - POWER
SCALE: 3/32" = 1'-0"

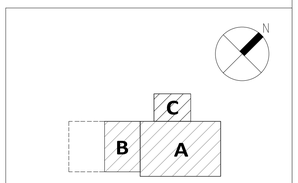

KEY PLAN

Professional Certification. I hereby certify that these documents were prepared or approved by me, and that I am a duly licensed professional engineer under the laws of the State of Maryland. License No. 49693, Expiration Date: 2020-07-24.

STATE OF MARYLAND
KATHRYN PARFITT
49693
PROFESSIONAL ENGINEER

ALL REPORTS, PLANS SPECIFICATIONS AND COMPUTER FILES RELATING TO THIS PROJECT ARE THE PROPERTY OF CRABTREE, ROHRBAUGH & ASSOCIATES. CRABTREE ROHRBAUGH & ASSOCIATES RETAINS ALL COMMON LAW, STATUTE AND OTHER RESERVED RIGHTS INCLUDING THE COPYRIGHT THERETO. REPRODUCTION OF THE MATERIAL HERIN OR SUBSTANTIAL USE WITHOUT WRITTEN PERMISSION OF CRABTREE, ROHRBAUGH & ASSOCIATES VIOLATES THE COPYRIGHT LAWS OF THE UNITED STATES AND WILL BE SUBJECT TO LEGAL PROSECUTION.
© CRABTREE, ROHRBAUGH & ASSOCIATES, INC 2019

REVISIONS

#	MM-DD-YR	NAME	DESCRIPTION OF CHANGES

CRABTREE ROHRBAUGH & ASSOCIATES - ARCHITECTS
100 WEST ROAD, SUITE 402, TOWSON MD 21204 410-528-0272
MECHANICSBURG, PENNSYLVANIA CHARLOTTESVILLE, VIRGINIA WHITE SULPHUR SPRINGS, WEST VIRGINIA
www.cra-architects.com

PROPOSED NEW
WASHINGTON COUNTY PUBLIC SAFETY TRAINING CENTER
WASHINGTON COUNTY PROJECT NO. 28-266
18350 PUBLIC SAFETY PLACE
HAGERSTOWN, MD 21740

ROOF PLAN - POWER

PLOT SCALE: 3/32" = 1'-0"

FILENAME:

DATE: December 18, 2019

PROJECT
3089

E3.0

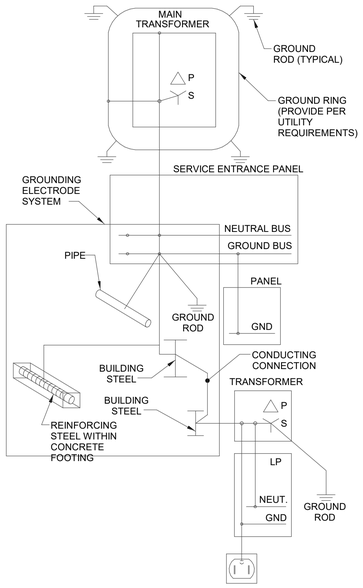

NOTES:

1. ALL GROUNDING ELECTRODE CONDUCTORS SHALL BE SIZED IN ACCORDANCE WITH NEC TABLE 250.66.
2. ALL GROUNDING CONDUCTORS FOR GROUNDING OF RACEWAY AND EQUIPMENT SHALL BE SIZED IN ACCORDANCE WITH NEC TABLE 250.122.
3. GROUNDING DETAIL IS SHOWN TO REPRESENT COMPLETE GROUNDING CONTINUITY.

TYPICAL GROUNDING DETAIL
NO SCALE

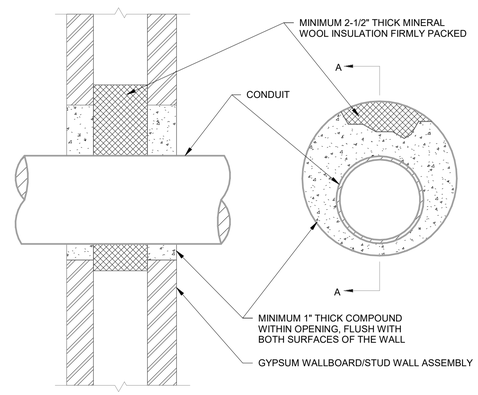

SECTION 'A-A'

NOTES:

1. MINIMUM 2HR FIRE RATING OF SEALING ASSEMBLY
2. UL SYSTEM W-L-1027

WALL CONDUIT PENETRATION - FIRE SEALING
NO SCALE

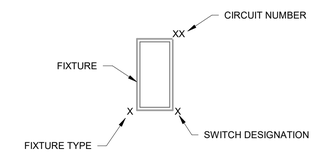

TYPICAL FIXTURE DESIGNATION
NO SCALE

ROOM NAME

100

PANEL DESIGNATION-*

TYPICAL CIRCUIT DESIGNATION
NO SCALE

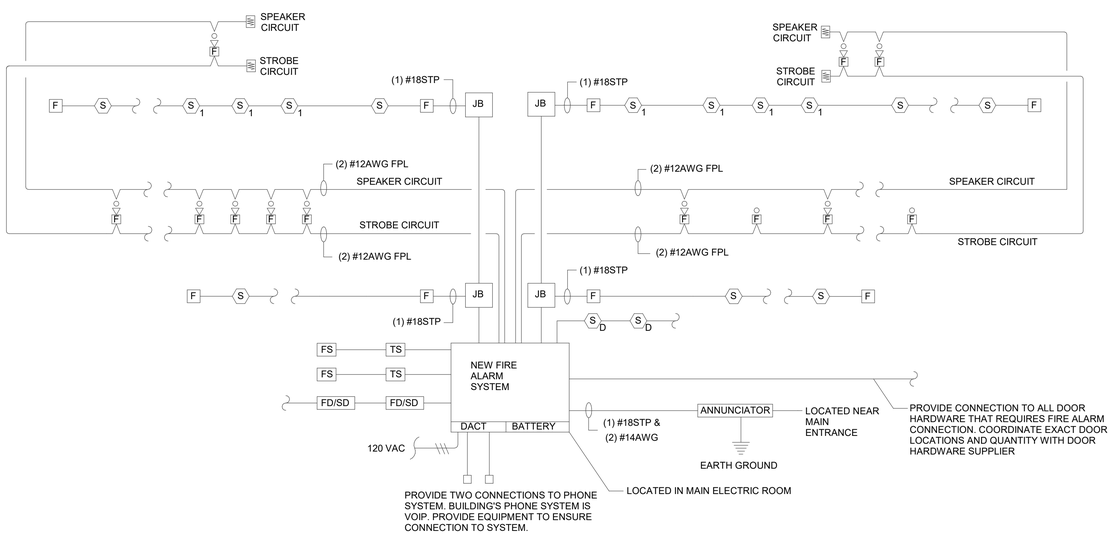

FIRE PROTECTION SIGNALING SYSTEM RISER DIAGRAM
NO SCALE

NOTES:

1. PROVIDE A FIRE ALARM SUBMITTAL INCLUDING MANUFACTURER'S LITERATURE FOR EACH COMPONENT SHALL BE MADE BY THE INSTALLING CONTRACTOR PRIOR TO INSTALLATION. APPROVED VOICE NOTIFICATION WILL BE REQUIRED IN ACCORDANCE WITH NFPA 101, 12.3.4.3.
2. FURNISH ALL DUCT DETECTORS AND ASSOCIATED WIRING. MECHANICAL CONTRACTOR TO INSTALL DETECTORS. CONTRACTOR SHALL REFER TO MECHANICAL PLANS FOR DUCT DETECTOR LOCATIONS AND QUANTITIES.
3. DIAGRAMMATIC ONLY - NUMBER OF DEVICES DOES NOT MATCH THOSE SHOWN ON THE DRAWING.
4. PROVIDE CONNECT TO ALL ZONE VALVES, FLOW AND TAMPER SWITCHES. SEE FIRE PROTECTION DRAWINGS FOR QUANTITIES AND LOCATIONS.
5. PROVIDE CONNECTION TO SMOKE AND FIRE/SMOKE DAMPERS. SEE MECHANICAL PLANS FOR LOCATIONS AND QUANTITIES.
6. FOR ALL COMPONENTS INCLUDING THE MAIN FIRE ALARM PANEL AND EXTENDER PANELS THAT REQUIRE POWER, PROVIDE 120V, 20A DEDICATED CIRCUIT FROM NEAREST PANEL WITH SPACE. EXTEND 2#12 & 1#12GRD IN 3/4"C FOR POWER.
7. PROVIDE SMOKE DETECTOR AND HEAT DETECTOR ABOVE MAIN FIRE ALARM PANEL.

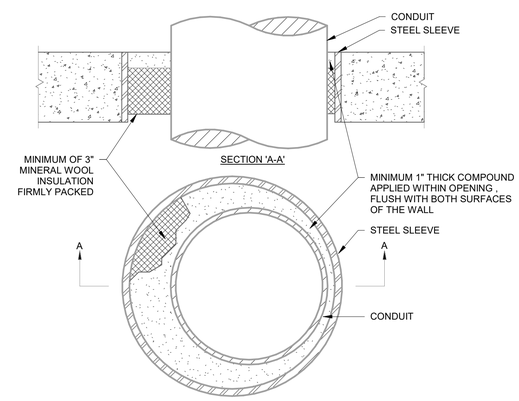

NOTES:

1. MINIMUM 3HR FIRE RATING OF SEALING ASSEMBLY
2. UL SYSTEM C-AJ-1081

CONDUIT CONCRETE FLOOR/WALL PENETRATION
NO SCALE

Professional Certification. I hereby certify that these documents were prepared or approved by me, and that I am a duly licensed professional engineer under the laws of the State of Maryland. License No. 49693, Expiration Date: 2020-07-24.

ALL REPORTS, PLANS SPECIFICATIONS AND COMPUTER FILES RELATING TO THIS PROJECT ARE THE PROPERTY OF CRABTREE, ROHRBAUGH & ASSOCIATES. CRABTREE ROHRBAUGH & ASSOCIATES RETAINS ALL COMMON LAW, STATUTE AND OTHER RESERVED RIGHTS INCLUDING THE COPYRIGHT THERETO. REPRODUCTION OF THE MATERIAL HERIN OR SUBSTANTIAL USE WITHOUT WRITTEN PERMISSION OF CRABTREE, ROHRBAUGH & ASSOCIATES VIOLATES THE COPYRIGHT LAWS OF THE UNITED STATES AND WILL BE SUBJECT TO LEGAL PROSECUTION.
© CRABTREE, ROHRBAUGH & ASSOCIATES, INC 2019

REVISIONS

#	MM-DD-YR	NAME	DESCRIPTION OF CHANGES

CRABTREE ROHRBAUGH & ASSOCIATES - ARCHITECTS
100 WEST ROAD, SUITE 402, TOWSON MD 21204 410-528-0272
www.cra-architects.com
MECHANICSBURG, PENNSYLVANIA CHARLOTTESVILLE, VIRGINIA WHITE SULPHUR SPRINGS, WEST VIRGINIA

PROPOSED NEW
WASHINGTON COUNTY PUBLIC SAFETY TRAINING CENTER
WASHINGTON COUNTY PROJECT NO. 28-266
18350 PUBLIC SAFETY PLACE
HAGERSTOWN, MD 21740

ELECTRICAL DETAILS

PLOT SCALE: AS INDICATED

FILENAME:

DATE: December 18, 2019

PROJECT
3089

E4.0

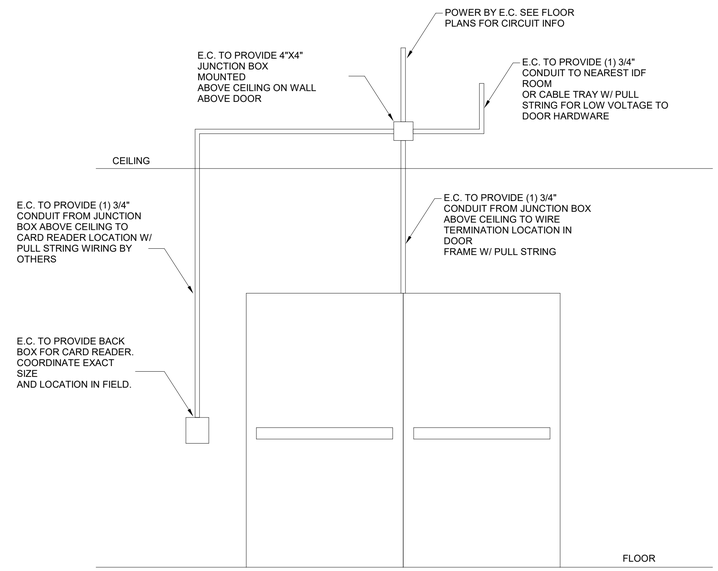

NOTE: EC SHALL INSTALL DOOR HARDWARE CABLING SUPPLIED WITH THE DOOR HARDWARE AND PROVIDE FINAL TERMINATIONS.

DOORS WITH REMOTE MOUNTED CARD READERS

NO SCALE

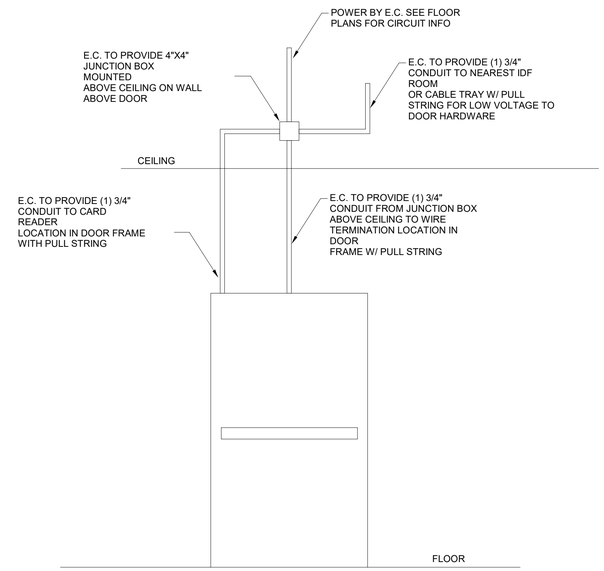

NOTE: EC SHALL INSTALL DOOR HARDWARE CABLING SUPPLIED WITH THE DOOR HARDWARE AND PROVIDE FINAL TERMINATIONS.

DOORS WITH MULLION MOUNTED CARD READERS

NO SCALE

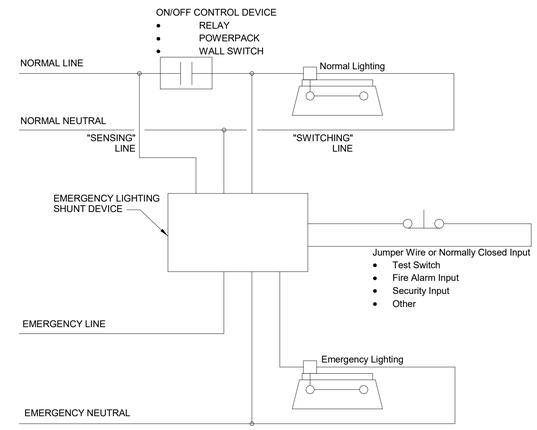

EMERGENCY LIGHTING CONTROL DEVICE

NO SCALE

NOTES:

1. DEVICE TO BE WIRED IN THE CONTROL DEVICE CONFIGURATION. EMERGENCY LIGHTING SHALL BE CONTROLLED THE SAME AS THE NORMAL LIGHTING IN THE SAME AREA.
2. PROVIDE DEVICE AS NECESSARY TO PROVIDE A COMPLETE AND FUNCTION SYSTEM.

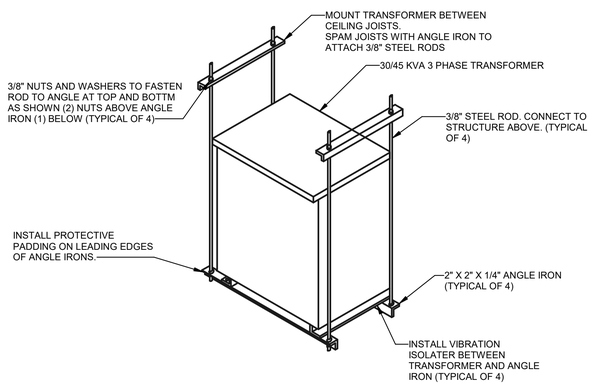

TRANSFORMER CEILING SUSPENSION

NO SCALE

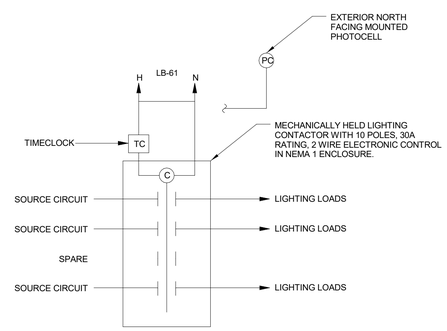

EXTERIOR LIGHTING CONTACTOR WIRING DIAGRAM

NO SCALE

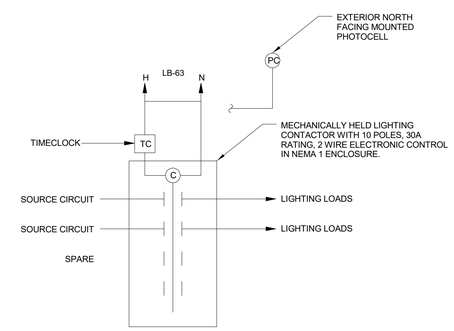

EXTERIOR EMERGENCY LIGHTING CONTACTOR WIRING DIAGRAM

NO SCALE

Professional Certification. I hereby certify that these documents were prepared or approved by me, and that I am a duly licensed professional engineer under the laws of the State of Maryland. License No. 49693, Expiration Date: 2020-07-24.

STATE OF MARYLAND KATHRYN PARFITT 49693 PROFESSIONAL ENGINEER

ALL REPORTS, PLANS SPECIFICATIONS AND COMPUTER FILES RELATING TO THIS PROJECT ARE THE PROPERTY OF CRABTREE, ROHRBAUGH & ASSOCIATES. CRABTREE ROHRBAUGH & ASSOCIATES RETAINS ALL COMMON LAW, STATUTE AND OTHER RESERVED RIGHTS INCLUDING THE COPYRIGHT THERETO. REPRODUCTION OF THE MATERIAL HERIN OR SUBSTANTIAL USE WITHOUT WRITTEN PERMISSION OF CRABTREE, ROHRBAUGH & ASSOCIATES VIOLATES THE COPYRIGHT LAWS OF THE UNITED STATES AND WILL BE SUBJECT TO LEGAL PROSECUTION.
© CRABTREE, ROHRBAUGH & ASSOCIATES, INC 2019

REVISIONS

#	MM-DD-YR	NAME	DESCRIPTION OF CHANGES

CRABTREE ROHRBAUGH & ASSOCIATES - ARCHITECTS
100 WEST ROAD, SUITE 402, TOWSON MD 21204 410-528-0272
MECHANICSBURG, PENNSYLVANIA CHARLOTTESVILLE, VIRGINIA WHITE SULPHUR SPRINGS, WEST VIRGINIA
www.cra-architects.com

PROPOSED NEW
WASHINGTON COUNTY PUBLIC SAFETY TRAINING CENTER
WASHINGTON COUNTY PROJECT NO. 28-266
18350 PUBLIC SAFETY PLACE
HAGERSTOWN, MD 21740

ELECTRICAL DETAILS

PLOT SCALE: AS INDICATED

FILENAME:

DATE: December 18, 2019

PROJECT 3089

E4.1

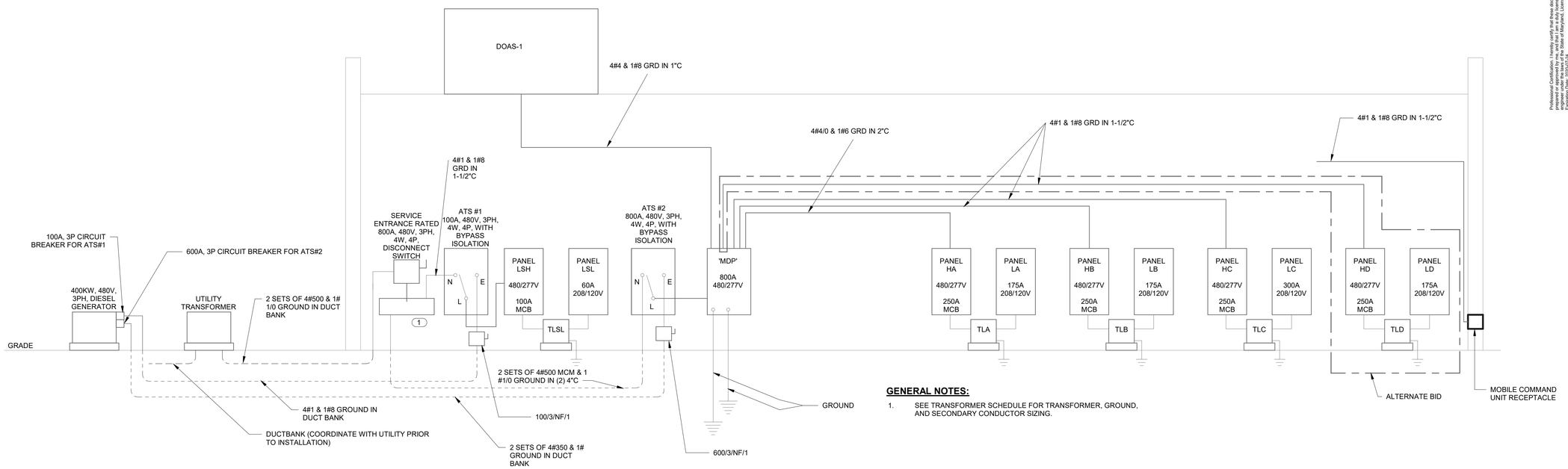

GENERAL NOTES:

1. SEE TRANSFORMER SCHEDULE FOR TRANSFORMER, GROUND, AND SECONDARY CONDUCTOR SIZING.

NOTES BY SYMBOL: (#)

1. HINGED WIRE TROUGH SIZE FOR ALL CONDUCTOR TAPS UTILIZE ILSCO CONDUCTOR TAPS FOR ALL FEEDER TAPS MADE IN WIRE TROUGH.

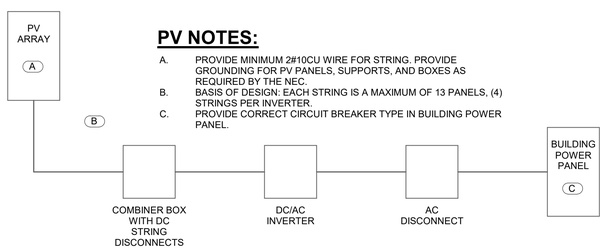

PV NOTES:

A. PROVIDE MINIMUM 2#10CU WIRE FOR STRING. PROVIDE GROUNDING FOR PV PANELS, SUPPORTS, AND BOXES AS REQUIRED BY THE NEC.
B. BASIS OF DESIGN: EACH STRING IS A MAXIMUM OF 13 PANELS, (4) STRINGS PER INVERTER.
C. PROVIDE CORRECT CIRCUIT BREAKER TYPE IN BUILDING POWER PANEL.

TYPICAL PV ARRAY DIAGRAM

NO SCALE

TRANSFORMER SCHEDULE

TRANSFORMER TAG	SIZE	TYPE	PRIMARY CONDUCTORS	SECONDARY CONDUCTORS	GROUND SIZE
TLSL	15 kVA	480V-208Y/120V	3#6 & 1#10 IN 3/4"C	4#6 & 1#10 IN 3/4"C	#8
TLA	45kVA	480V-208Y/120V	3#1/0 & 1#6 IN 1-1/2"C	4#2/0 & 1#6 IN 2"C	#4
TLB	45 kVA	480V-208Y/120V	3#1/0 & 1#6 IN 1-1/2"C	4#2/0 & 1#6 IN 2"C	#4
TLC	45kVA	480V-208Y/120V	3#1/0 & 1#6 IN 1-1/2"C	4#2/0 & 1#6 IN 2"C	#4
TLD	45kVA	480V-208Y/120V	3#1/0 & 1#6 IN 1-1/2"C	4#2/0 & 1#6 IN 2"C	#4

ALTERNATE BID

PANEL: LSH BUS AMP: 100A AMPS MAIN BREAKER: 100A ELECTRONIC TRIP
MOUNTING: SURFACE PHASE: 3 WIRE: 4 VOLTAGE: 480/277 AIC: 42,000
NOTE: PROVIDE WITH TVSS

CKT	CIRCUIT DESCRIPTION	BREAKER P	BREAKER AMP	WIRE NO	WIRE SIZE	GND SIZE	COND	LOAD KVA	KVA/PH A	KVA/PH B	KVA/PH C	LOAD KVA	COND	GND SIZE	WIRE SIZE	WIRE NO	BREAKER AMP	BREAKER P	CIRCUIT DESCRIPTION	CKT
1								0	0.0			0	3/4"	10	10	2	20	1	SITE LIGHTING	2
3	XFMR TLSL	3	40	SEE RISER DIAGRAM				0		0.1		0.07	3/4"	12	12	2	20	1	LIGHTING - CORRIDOR B120	4
5								0			0.1	0.14	3/4"	12	12	2	20	1	LIGHTING - B100, B102, B106, & B109	6
7	ALTERNATE BID: LIGHTING - CORRIDOR B120	1	20	2	12	12	3/4"	0.07	0.5			0.45	3/4"	12	12	2	20	1	LIGHTING - MULTIPURPOSE ROOM	8
9	ALTERNATE BID: LIGHTING - B110, B112, B116, & B119	1	20	2	12	12	3/4"	0.14		0.5		0.344	3/4"	12	12	2	20	1	LIGHTING - CORRIDOR A120, A139, A113, & A106	10
11	EXIT SIGNS	1	20	2	10	10	3/4"	.5			0.7	0.204	3/4"	12	12	2	20	1	LIGHTING - CORRIDOR A119	12
13	EXIT SIGNS	1	20	2	10	10	3/4"	.5	0.6			0.096	3/4"	12	12	2	20	1	LIGHTING - A121, A122, & A123	14
15	ELECTRIC ROOM - LIGHTS	1	20	2	12	12	3/4"	.5		0.7		0.181	3/4"	12	12	2	20	1	LIGHTING - A124, A125, A126, A134, A136, & A138	16
17	SPARE	1	20					0			0.0	0								18
19	SPARE	1	20					0	0.0			0	SEE RISER				20	1	TLSL	20
21	SPARE	1	20					0		0.0		0								22
23	SPARE	1	20					0			0.0	0					20	1	SPARE	24
25	SPARE	1	20					0	0.0			0					20	1	SPARE	26
27	SPARE	1	20					0		0.0		0					20	1	SPARE	28
29	PREPARED SPACE	1						0			0.0	0					20	1	SPARE	30
31	PREPARED SPACE	1						0	0.0			0						1	PREPARED SPACE	32
33	PREPARED SPACE	1						0		0.0		0						1	PREPARED SPACE	34
35	PREPARED SPACE	1						0			0.0	0						1	PREPARED SPACE	36
37	PREPARED SPACE	1						0	0.0			0						1	PREPARED SPACE	38
39	PREPARED SPACE	1						0		0.0		0						1	PREPARED SPACE	40
41	PREPARED SPACE	1						0			0.0	0						1	PREPARED SPACE	42
							TOTAL KVA/PHASE		1.1	1.2	0.8									
							TOTAL KVA PANEL			3.2										
							TOTAL AMPS PANEL			4										

PANEL: LSL BUS AMP: 100A AMPS MAIN BREAKER: 35A
MOUNTING: SURFACE PHASE: 3 WIRE: 4W VOLTAGE: 208/120 AIC: 18,000

CKT	CIRCUIT DESCRIPTION	BREAKER P	BREAKER AMP	WIRE NO	WIRE SIZE	GND SIZE	COND	LOAD KVA	KVA/PH A	KVA/PH B	KVA/PH C	LOAD KVA	COND	GND SIZE	WIRE SIZE	WIRE NO	BREAKER AMP	BREAKER P	CIRCUIT DESCRIPTION	CKT
1	FIRE ALARM CONTROL PANEL	1	20	2	12	12	3/4"	0.5	0.5			0.0	3/4"	12	12	2	20	1	SPARE	2
3	SPARE	1	20					0.0		0.0		0.0					20	1	SPARE	4
5	SPARE	1	20					0.0			0.0	0.0					20	1	SPARE	6
7	SPARE	1	20					0.0	0.0			0.0					20	1	SPARE	8
9	SPARE	1	20					0.0		0.0		0.0					20	1	SPARE	10
11	SPARE	1	20					0.0			0.0	0.0					20	1	SPARE	12
13	SPARE	1	20					0.0	0.0			0.0					20	1	SPARE	14
15	SPARE	1	20					0.0		0.0		0.0					20	1	SPARE	16
17	PREPARED SPACE	1						0.0			0.0	0.0						1	PREPARED SPACE	18
19	PREPARED SPACE	1						0.0	0.0			0.0						1	PREPARED SPACE	20
21	PREPARED SPACE	1						0.0		0.0		0.0						1	PREPARED SPACE	22
23	PREPARED SPACE	1						0.0			0.0	0.0						1	PREPARED SPACE	24
25	PREPARED SPACE	1						0.0	0.0			0.0						1	PREPARED SPACE	26
27	PREPARED SPACE	1						0.0		0.0		0.0						1	PREPARED SPACE	28
29	PREPARED SPACE	1						0.0			0.0	0.0						1	PREPARED SPACE	30
							TOTAL KVA/PHASE		0.5	0.0	0.0									
							TOTAL KVA PANEL			0.5										
							TOTAL AMPS PANEL			1										

Professional Certification. I hereby certify that these documents were prepared or approved by me, and that I am a duly licensed professional engineer under the laws of the State of Maryland. License No. 49693, Expiration Date: 2020-07-24.

STATE OF MARYLAND KATHRYN PARFITT 49693 PROFESSIONAL ENGINEER

ALL REPORTS, PLANS SPECIFICATIONS AND COMPUTER FILES RELATING TO THIS PROJECT ARE THE PROPERTY OF CRABTREE, ROHRBAUGH & ASSOCIATES. CRABTREE ROHRBAUGH & ASSOCIATES RETAINS ALL COMMON LAW, STATUTE AND OTHER RESERVED RIGHTS INCLUDING THE COPYRIGHT THERETO. REPRODUCTION OF THE MATERIAL HERIN OR SUBSTANTIAL USE WITHOUT WRITTEN PERMISSION OF CRABTREE, ROHRBAUGH & ASSOCIATES VIOLATES THE COPYRIGHT LAWS OF THE UNITED STATES AND WILL BE SUBJECT TO LEGAL PROSECUTION.
© CRABTREE, ROHRBAUGH & ASSOCIATES, INC 2019

REVISIONS

#	MM-DD-YR	NAME	DESCRIPTION OF CHANGES

CRABTREE ROHRBAUGH & ASSOCIATES - ARCHITECTS
100 WEST ROAD, SUITE 402, TOWSON MD 21204 410-528-0272
www.cra-architects.com
MECHANICSBURG, PENNSYLVANIA CHARLOTTESVILLE, VIRGINIA WHITE SULPHUR SPRINGS, WEST VIRGINIA

PROPOSED NEW
WASHINGTON COUNTY PUBLIC SAFETY TRAINING CENTER
WASHINGTON COUNTY PROJECT NO. 28-266
18350 PUBLIC SAFETY PLACE
HAGERSTOWN, MD 21740

ELECTRICAL RISER & SCHEDULES

PLOT SCALE: AS INDICATED
FILENAME:
DATE: December 18, 2019

PROJECT 3089

E5.0

PANEL: MDP DIST BUS AMP: 800A AMPS MAIN BREAKER: 800A (100% RATED)

MOUNTING: PHASE: 3 WIRE: 4 VOLTAGE: 480/277V AIC: 65,000

CKT	CIRCUIT DESCRIPTION	BREAKER		LOAD	KVA/PH			LOAD	BREAKER		CIRCUIT DESCRIPTION	CKT
		P	AMP	KVA	A	B	C	KVA	AMP	P		
				50.5	63.8			13.3				
1	PANEL HA	3	200	45.3		53.9		8.6	100	3	PANEL HB	2
				43.3			50.1	6.8				
				10.8	10.8			0.0				
3	PANEL HC	3	100	8.2		8.2		0.0	60	3	SPARE	4
				8.3			8.3	0.0				
				10.5	12.3			1.8				
5	PANEL HD	3	100	8.0		9.8		1.8	80	3	DOAS-1	6
				7.2			9.0	1.8				
				0.0	0.0			0.0				
7	SPARE	3	100	0.0		0.0		0.0	60	3	TVSS	8
				0.0			0.0	0.0				
				0.0	0.0			0.0				
9	SPARE	3	100	0.0		0.0		0.0	100	3	SPARE	10
				0.0			0.0	0.0				
				0.0	0.0			0.0				
11	SPARE	3	200	0.0		0.0		0.0	100	3	SPARE	12
				0.0			0.0	0.0				
				0.0	0.0			0.0				
13	SPARE	3	100	0.0		0.0		0.0	100	3	SPARE	14
				0.0			0.0	0.0				
				0.0	0.0			0.0				
15	SPARE	3	100	0.0		0.0		0.0	100	3	SPARE	16
				0.0			0.0	0.0				
	TOTAL KVA PER PHASE				86.9	71.9	67.4	GENERAL NOTE: SEE RISER DIAGRAM FOR WIRE AND CONDUIT INFORMATION. PROVIDE WITH DIGITAL METER.				
	TOTAL KVA				226.2							
	TOTAL AMPS				272.1			NOTES: . * - PROVIDE ELECTRONIC TRIP CIRCUIT BREAKER				

ALTERNATE BID

PANEL: HA BUS AMP: 250A AMPS MAIN BREAKER: MLO

MOUNTING: SURFACE PHASE: 3 WIRE: 4 VOLTAGE: 480/277 AIC: 42,000

CKT	CIRCUIT DESCRIPTION	BREAKER		WIRE		GND	COND	LOAD	KVA/PH			LOAD	COND	GND	WIRE		BREAKER		CIRCUIT DESCRIPTION	CKT
		P	AMP	NO	SIZE	SIZE		KVA	A	B	C	KVA		SIZE	SIZE	NO	AMP	P		
1	LIGHTS	1	20	2	12	12	3/4"	1.8	5.2			3.4	3/4"	12	12	2	20	1	LIGHTS	2
3	LIGHTS	1	20	2	12	12	3/4"	1.9		2.3		0.4	3/4"	12	12	2	20	1	LIGHTS - SIGN	4
5	LIGHTS - PARKING LOT	1	20	2	8	8	3/4"	2.0			2.0	0.0	3/4"	8	8	2	20	1	EXTERIOR LIGHTING	6
7	LIGHTS - OUTDOOR SIGN	1	20	2	8	8	3/4"	0.2	6.2			6.0								8
9								6.0		12.0		6.0	3/4"	10	10	4	25	3	ODU-1	10
11	ODU-2	3	25	4	10	10	3/4"	6.0			12.0	6.0								12
13								6.0	10.5			4.5								14
15								4.5		9.0		4.5	3/4"	12	12	4	20	3	OD-1	16
17	ODU-2	3	25	4	10	10	3/4"	4.5			9.0	4.5								18
19								4.5	15.7			11.2								20
21	LIGHTS - PARKING	1	20	2	8	8	3/4"	0.5		11.7		11.2	3/4"	10	6	4	50	3	RTU-1	22
23	FLAG POLE LIGHTS	1	20	2	10	10	3/4"	0.2			11.4	11.2								24
25								0.0	0.0			0.0	3/4"	12	12	2	20	1		26
27								0.0		0.0		0.0								28
29								0.0			0.0	0.0								30
31								0.0	0.0			0.0								32
33								0.0		0.0		0.0								34
35								0.0			0.0	0.0								36
37								12.9	12.9			0.0								38
39	XFMR TLA	3	70	SEE RISER DIAGRAM				10.8		10.8		0.0								40
41								9.1			9.1	0.0								42
	TOTAL KVA/PHASE								50.5	45.8	43.5									
	TOTAL KVA PANEL								139.8											
	TOTAL AMPS PANEL								168											

PANEL: HB BUS AMP: 100A AMPS MAIN BREAKER: MLO

MOUNTING: SURFACE PHASE: 3 WIRE: 4 VOLTAGE: 480/277 AIC: 42,000

CKT	CIRCUIT DESCRIPTION	BREAKER		WIRE		GND	COND	LOAD	KVA/PH			LOAD	COND	GND	WIRE		BREAKER		CIRCUIT DESCRIPTION	CKT
		P	AMP	NO	SIZE	SIZE		KVA	A	B	C	KVA		SIZE	SIZE	NO	AMP	P		
1	LIGHTS	1	20	2	12	12	3/4"	3.0	3.0			0.0					20	1	SPARE	2
3	SPARE	1	20					0.0		0.0		0.0					20	1	SPARE	4
5	SPARE	1	20					0.0			0.0	0.0					20	1	SPARE	6
7	SPARE	1	20					0.0	0.0			0.0					20	1	SPARE	8
9	SPARE	1	20					0.0		0.0		0.0					20	1	SPARE	10
11	SPARE	1	20					0.0			0.0	0.0					20	1	SPARE	12
13	SPARE	1	20					0.0	0.0			0.0					20	1	SPARE	14
15	SPARE	1	20					0.0		0.0		0.0					20	1	SPARE	16
17	PREPARED SPACE	1						0.0			0.0	0.0						1	PREPARED SPACE	18
19	PREPARED SPACE	1						0.0	0.0			0.0						1	PREPARED SPACE	20
21	PREPARED SPACE	1						0.0		0.0		0.0						1	PREPARED SPACE	22
23	PREPARED SPACE	1						0.0			0.0	0.0						1	PREPARED SPACE	24
25								10.3	10.3			0.0						1	PREPARED SPACE	26
27	XFMR TLB	3	70	SEE RISER DIAGRAM				8.6		8.6		0.0						1	PREPARED SPACE	28
29								6.8			6.8	0.0						1	PREPARED SPACE	30
	TOTAL KVA/PHASE								13.3	8.6	6.8									
	TOTAL KVA PANEL								28.7											
	TOTAL AMPS PANEL								35											

PANEL: HC BUS AMP: 100A AMPS MAIN BREAKER: MLO

MOUNTING: SURFACE PHASE: 3 WIRE: 4 VOLTAGE: 480/277 AIC: 42,000

CKT	CIRCUIT DESCRIPTION	BREAKER		WIRE		GND	COND	LOAD	KVA/PH			LOAD	COND	GND	WIRE		BREAKER		CIRCUIT DESCRIPTION	CKT
		P	AMP	NO	SIZE	SIZE		KVA	A	B	C	KVA		SIZE	SIZE	NO	AMP	P		
1	LIGHTS	1	20	2	12	12	3/4"	2.1	3.9			1.8	3/4"	12	12	2	20	1	LIGHTS	2
3	SPARE	1	20					0.0		0.0		0.0					20	1	SPARE	4
5	SPARE	1	20					0.0			0.0	0.0					20	1	SPARE	6
7	SPARE	1	20					0.0	0.0			0.0					20	1	SPARE	8
9	SPARE	1	20					0.0		0.0		0.0					20	1	SPARE	10
11	SPARE	1	20					0.0			0.0	0.0					20	1	SPARE	12
13	SPARE	1	20					0.0	0.0			0.0					20	1	SPARE	14
15	SPARE	1	20					0.0		0.0		0.0					20	1	SPARE	16
17	SPARE	1	20					0.0			0.0	0.0						1	PREPARED SPACE	18
19	PREPARED SPACE	1						0.0	0.0			0.0						1	PREPARED SPACE	20
21	PREPARED SPACE	1						0.0		0.0		0.0						1	PREPARED SPACE	22
23	PREPARED SPACE	1						0.0			0.0	0.0						1	PREPARED SPACE	24
25								6.9	6.9			0.0						1	PREPARED SPACE	26
27	XFMR TLC	3	70	SEE RISER DIAGRAM				8.2		8.2		0.0						1	PREPARED SPACE	28
29								8.3			8.3	0.0						1	PREPARED SPACE	30
	TOTAL KVA/PHASE								10.8	8.2	8.3									
	TOTAL KVA PANEL								27.3											
	TOTAL AMPS PANEL								33											

ALTERNATE BID

PANEL: HD BUS AMP: 100A AMPS MAIN BREAKER: MLO

MOUNTING: SURFACE PHASE: 3 WIRE: 4 VOLTAGE: 480/277 AIC: 42,000

CKT	CIRCUIT DESCRIPTION	BREAKER		WIRE		GND	COND	LOAD	KVA/PH			LOAD	COND	GND	WIRE		BREAKER		CIRCUIT DESCRIPTION	CKT
		P	AMP	NO	SIZE	SIZE		KVA	A	B	C	KVA		SIZE	SIZE	NO	AMP	P		
1	LIGHTS	1	20	2	12	12	3/4"	3.0	3.0			0.0	3/4"	12	12	2	20	1	SPARE	2
3	SPARE	1	20					0.0		0.0		0.0					20	1	SPARE	4
5	SPARE	1	20					0.0			0.0	0.0					20	1	SPARE	6
7	SPARE	1	20					0.0	0.0			0.0					20	1	SPARE	8
9	SPARE	1	20					0.0		0.0		0.0					20	1	SPARE	10
11	SPARE	1	20					0.0			0.0	0.0					20	1	SPARE	12
13	SPARE	1	20					0.0	0.0			0.0					20	1	SPARE	14
15	SPARE	1	20					0.0		0.0		0.0					20	1	SPARE	16
17	PREPARED SPACE	1						0.0			0.0	0.0						1	PREPARED SPACE	18
19	PREPARED SPACE	1						0.0	0.0			0.0						1	PREPARED SPACE	20
21	PREPARED SPACE	1						0.0		0.0		0.0						1	PREPARED SPACE	22
23	PREPARED SPACE	1						0.0			0.0	0.0						1	PREPARED SPACE	24
25								7.5	7.5			0.0						1	PREPARED SPACE	26
27	XFMR TLD	3	70	SEE RISER DIAGRAM				8.0		8.0		0.0						1	PREPARED SPACE	28
29								7.2			7.2	0.0						1	PREPARED SPACE	30
	TOTAL KVA/PHASE								10.5	8.0	7.2									
	TOTAL KVA PANEL								25.7											
	TOTAL AMPS PANEL								31											

Professional Certification. I hereby certify that these documents were prepared or approved by me, and that I am a duly licensed professional engineer under the laws of the State of Maryland, License No. 49693, Expiration Date: 2020-07-24.

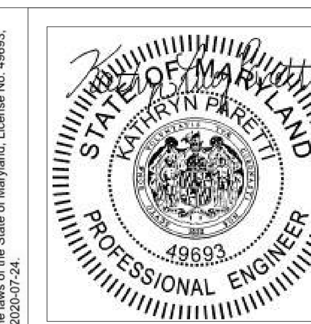

ALL REPORTS, PLANS SPECIFICATIONS AND COMPUTER FILES RELATING TO THIS PROJECT ARE THE PROPERTY OF CRABTREE, ROHRBAUGH & ASSOCIATES. CRABTREE ROHRBAUGH & ASSOCIATES RETAINS ALL COMMON LAW, STATUTE AND OTHER RESERVED RIGHTS INCLUDING THE COPYRIGHT THERETO. REPRODUCTION OF THE MATERIAL HERIN OR SUBSTANTIAL USE WITHOUT WRITTEN PERMISSION OF CRABTREE, ROHRBAUGH & ASSOCIATES VIOLATES THE COPYRIGHT LAWS OF THE UNITED STATES AND WILL BE SUBJECT TO LEGAL PROSECUTION.
© CRABTREE, ROHRBAUGH & ASSOCIATES, INC 2019

REVISIONS

01	MM-DD-YR	NAME	DESCRIPTION OF CHANGES

CRABTREE ROHRBAUGH & ASSOCIATES - ARCHITECTS
100 WEST ROAD, SUITE 402, TOWSON MD 21204 410-528-0272 www.cra-architects.com
MECHANICSBURG, PENNSYLVANIA CHARLOTTESVILLE, VIRGINIA WHITE SULPHUR SPRINGS, WEST VIRGINIA

PROPOSED NEW
WASHINGTON COUNTY PUBLIC SAFETY TRAINING CENTER
WASHINGTON COUNTY PROJECT NO. 28-266
18350 PUBLIC SAFETY PLACE
HAGERSTOWN, MD 21740

ELECTRICAL SCHEDULES

PLOT SCALE: AS INDICATED

FILENAME:

DATE: December 18, 2019

PROJECT
3089

E5.1

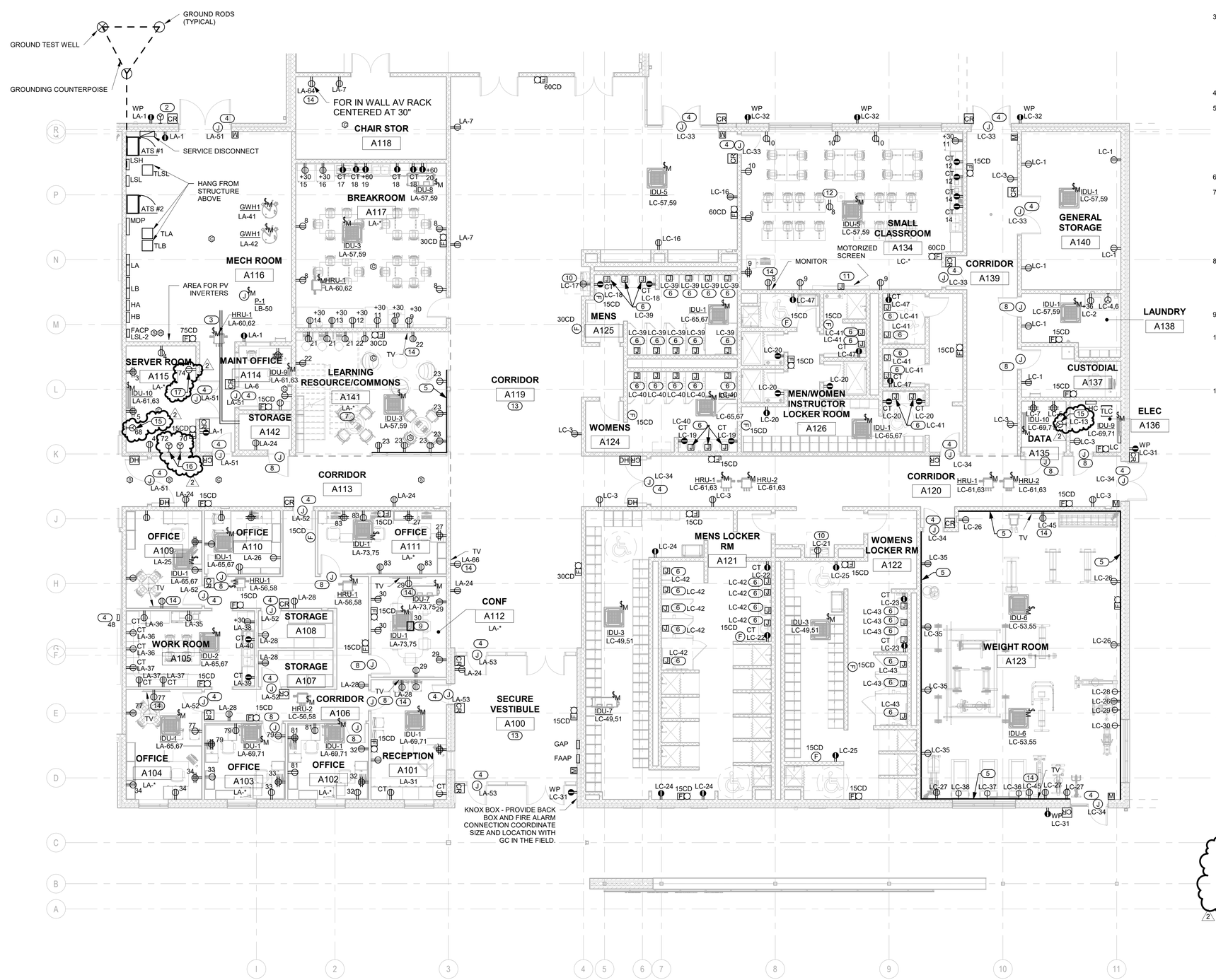

1 FIRST FLOOR PLAN - UNIT A - POWER

SCALE: 1/8" = 1'-0"

GENERAL NOTES:

1. IN OFFICE AREA PROVIDE FIRE ALARM CIRCUIT WITH 25% SPARE CAPACITY.
2. PROVIDE 1" CONDUIT TO ALL INTERIOR DOOR FRAMES THAT ARE NOT SCHEDULED TO RECEIVE ELECTRONIC HARDWARE FOR FUTURE INSTALLATION OF CARD READERS, ETC. CONDUITS TO EXTEND FROM DOOR FRAME TO POINT ABOVE THE FINISH CEILING FOR EASY INSTALLATION OF WIRING, ETC. IN THE FUTURE.
3. SEE DETAILS FOR FLOOR AND WALL PENETRATION SEALING REQUIREMENTS. WHERE CONDUIT AND WIRE PENETRATES THE WALL, THE WALL SHALL NOT ACT AS A SUPPORT. THE RACEWAY SHALL BE INDEPENDENTLY SUPPORTED ON EACH SIDE OF THE WALL. IF THE WALL PENETRATION IS NOT SEALED, PROVIDE SLEEVE TO PROTECT RACEWAY FROM DAMAGE. WALL AND FLOOR PENETRATIONS SHALL BE CUT USING HOLE SAWS OR EQUIVALENT. PENETRATION SHALL NOT HAVE JAGGED EDGES.
4. SEE DETAILS FOR CLARIFICATION OF TYPICAL CIRCUIT DESIGNATIONS.
5. PROVIDE POWER TO ALL DOORS WITH HARDWARE REQUIRING POWER CONNECTIONS. PROVIDE CONDUITS FOR ALL DOOR HARDWARE CABLING. INSTALL ALL CABLING FURNISHED BY THE DOOR HARDWARE SUPPLIER. COORDINATE WITH THE DOOR HARDWARE SUPPLIER FOR A SPECIFIC LIST OF DOORS REQUIRING POWER AND CABLING INSTALLATION. SEE DOOR HARDWARE SCHEDULE FOR MORE INFORMATION. SEE DETAILS FOR MORE INFORMATION.
6. ALL RECEPTACLES LOCATED IN CEILING SHALL FACE INTO OCCUPIED SPACE.
7. FOR ALL RECEPTACLES NOTED AS POWERING TVS OR MONITORS, COORDINATE EXACT MOUNTING HEIGHT AND LOCATION WITH INTERIOR DRAWINGS TO ENSURE RECEPTACLE AND DATA FALL BEHIND TV. RECEPTACLES INSTALLED WITHOUT PROPER COORDINATION SHALL BE RELOCATED AT NO ADDITIONAL COST TO THE OWNER. COORDINATE LOCATION OF DATA DEVICE WITH POWER BOX. BOXES SHALL BE INSTALLED DIRECTLY ADJACENT TO EACH OTHER.
8. COORDINATE THE LOCATION OF ALL RECEPTACLES LOCATED ADJACENT TO TACK BOARDS, TACKSTRIPS, AND OTHER PERMANENT WALL FIXTURES. RECEPTACLES SHALL NOT BE LOCATED BEHIND TACK BOARDS AND TACKSTRIPS. SEE ARCHITECTURAL INTERIOR DRAWINGS FOR EXACT LOCATIONS OF TACK BOARDS AND OTHER PERMANENT WALL FIXTURES.
9. COORDINATE COUNTERTOP RECEPTACLE LOCATIONS WITH CASEWORK. ENSURE RECEPTACLES ARE NOT BEHIND TALL UNITS.
10. IN AREAS WHERE THERE IS NO CEILING OR CEILING CLOUDS, ALL DEVICES, BOXES, CONDUITS, AND APPEARANCE SHALL BE PAINTABLE. ALL CONDUIT AND WIRE SHALL BE RUN TIGHT TO THE STRCTURE. ALL LABELS FOR JUNCTION BOXES, CONDUIT, AND DEVICES WHERE EVERYTHING IS PAINTED SHALL BE INSTALLED AFTER PAINTING.
11. COORDINATE LOCATION OF ALL FIRE ALARM DEVICES WITH INTERIOR DRAWINGS BEFORE ROUGH-IN. COORDINATE SPECIFICALLY WITH SOUND PANELS, MIRRORS, TACTBOARDS, AND WHITEBOARDS.

NOTES BY SYMBOL: (#)

(THIS SHEET ONLY)

1. PROVIDE TWO COMPARTMENT DIVIDED SURFACE RACEWAY NO LARGER THAN 4" HIGH ON HOLLOW METAL BASE PAINTED TO MATCH BASE. BASIS OF DESIGN: WIREMOLD AL4750.
2. PROVIDE 100A, 125/250V, 3PH, PIN AND SLEEVE RECEPTACLE. HUBBELL MODEL # M4100R12. CONFIGURATION TO MATCH MOBILE COMMAND UNIT PLUG IN WEATHER PROOF ENCLOSURE.
3. PROVIDE (1) 3" CONDUIT & (1) 1" CONDUIT FOR FUTURE ELEVATOR. PROVIDE PULL STRING.
4. PROVIDE POWER TO DOOR HARDWARE REQUIRING POWER. SEE DETAILS FOR MORE INFORMATION. CIRCUIT SHOWN SHALL BE USED BY ALL DOORS IN THE GENERAL AREA. FOR FIRE DOORS, PROVIDE SMOKE DETECTORS ON EITHER SIDE OF DOOR WITHIN 5' CONNECTED TO THE DOOR HARDWARE. CONNECT TO FIRE ALARM FOR DOOR RELEASE IN EMERGENCY.
5. PROVIDE PLUGMOLD RACEWAY WITH RECEPTACLES FINISH. SELECTED BY ARCHITECT.
6. PROVIDE 24V TRANSFORMER, POWER TO TRANSFORMER AND FINAL CONNECTION TO PLUMBING FIXTURE.
7. FOR ALL POWER WIRING FOR DEVICES IN THE CEILING OR ESLEWHERE IN THE SPACE, AN ACCESS PANEL MUST BE UTILIZED FOR ANY JUNCTION BOX LOCATIONS. THE BRANCH CIRCUIT CONDUIT SHALL BE CONCEILED BEHIND THE EPIC DECK PANELS. REFER TO EPIC DECK DETAILS ON ARCHITECTURAL PLANS FOR INSTALLATION PRACTICE FOR ELECTRICAL DEVICES AND CONDUIT. EXPOSED CONDUIT SHALL NOT BE USED.
8. PROVIDE 1"C TO DOOR FRAME AND EXTEND TO 6" ABOVE ACCESSIBLE CEILING WITH PULL STRING.
9. FLOOR BOX - PROVIDE (2) DUPLEX RECEPTACLES.
10. RECEPTACLE FOR EWC SHALL BE INSTALLED TO ENSURE IT IS COVERED BY SKIRT. COORDINATE WITH SELECTED FIXTURE.
11. PROVIDE FINAL POWER CONNECTION TO MOTORIZED SCREEN. CONTROL DEVICE PROVIDED WITH UNIT. PROVIDE ALL INTERCONNECTING WIRING.
12. PROVIDE RECEPTACLE IN CEILING FOR PROJECTOR.
13. PROVIDE COMPLETE SMOKE DETECTION COVERAGE IN THIS AREA WITH BEAM STYLE SMOKE DETECTORS.
14. REFER TO AV DRAWINGS FOR MOUNTING HEIGHTS OF OUTLETS FOR DISPLAYS.
15. PROVIDE LOCKING 30A 120V RECEPTACLE FOR UPS. COORDINATE EXACT ROOM LAYOUT IN FIELD.
16. PROVIDE (2) LOCKING 30A 120V RECEPTACLES FOR AV RACK. COORDINATE EXACT ROOM LAYOUT IN FIELD.
17. PROVIDE (1) DEDICATED 20A 120V RECEPTACLE FOR SECURITY RACK. COORDINATE EXACT ROOM LAYOUT IN FIELD.

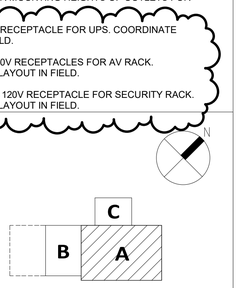

KEY PLAN

Professional Certification. I hereby certify that these documents were prepared or approved by me, and that I am a duly licensed professional engineer under the laws of the State of Maryland. License No. 49693, Expiration Date: 2020-07-24.

STATE OF MARYLAND
KATHRYN PARFITT
49693
PROFESSIONAL ENGINEER

ALL REPORTS, PLANS SPECIFICATIONS AND COMPUTER FILES RELATING TO THIS PROJECT ARE THE PROPERTY OF CRABTREE, ROHRBAUGH & ASSOCIATES. CRABTREE ROHRBAUGH & ASSOCIATES RETAINS ALL COMMON LAW, STATUTE AND OTHER RESERVED RIGHTS INCLUDING THE COPYRIGHT THERETO. REPRODUCTION OF THE MATERIAL HERIN OR SUBSTANTIAL USE WITHOUT WRITTEN PERMISSION OF CRABTREE, ROHRBAUGH & ASSOCIATES VIOLATES THE COPYRIGHT LAWS OF THE UNITED STATES AND WILL BE SUBJECT TO LEGAL PROSECUTION.
© CRABTREE, ROHRBAUGH & ASSOCIATES, INC 2019

REVISIONS

#	MM-DD-YR	NAME	DESCRIPTION OF CHANGES
2	08/28/20	BIA	ADDENDUM 4

CRABTREE ROHRBAUGH & ASSOCIATES - ARCHITECTS
100 WEST ROAD, SUITE 402, TOWSON MD 21204 410-528-0272
www.cra-architects.com
MECHANICSBURG, PENNSYLVANIA CHARLOTTESVILLE, VIRGINIA WHITE SULPHUR SPRINGS, WEST VIRGINIA

PROPOSED NEW
WASHINGTON COUNTY PUBLIC SAFETY TRAINING CENTER
WASHINGTON COUNTY PROJECT NO. 28-266
18350 PUBLIC SAFETY PLACE
HAGERSTOWN, MD 21740

FIRST FLOOR PLAN - UNIT A - POWER

PLOT SCALE: 1/8" = 1'-0"

FILENAME:

DATE: December 18, 2019

PROJECT 3089

E1.0

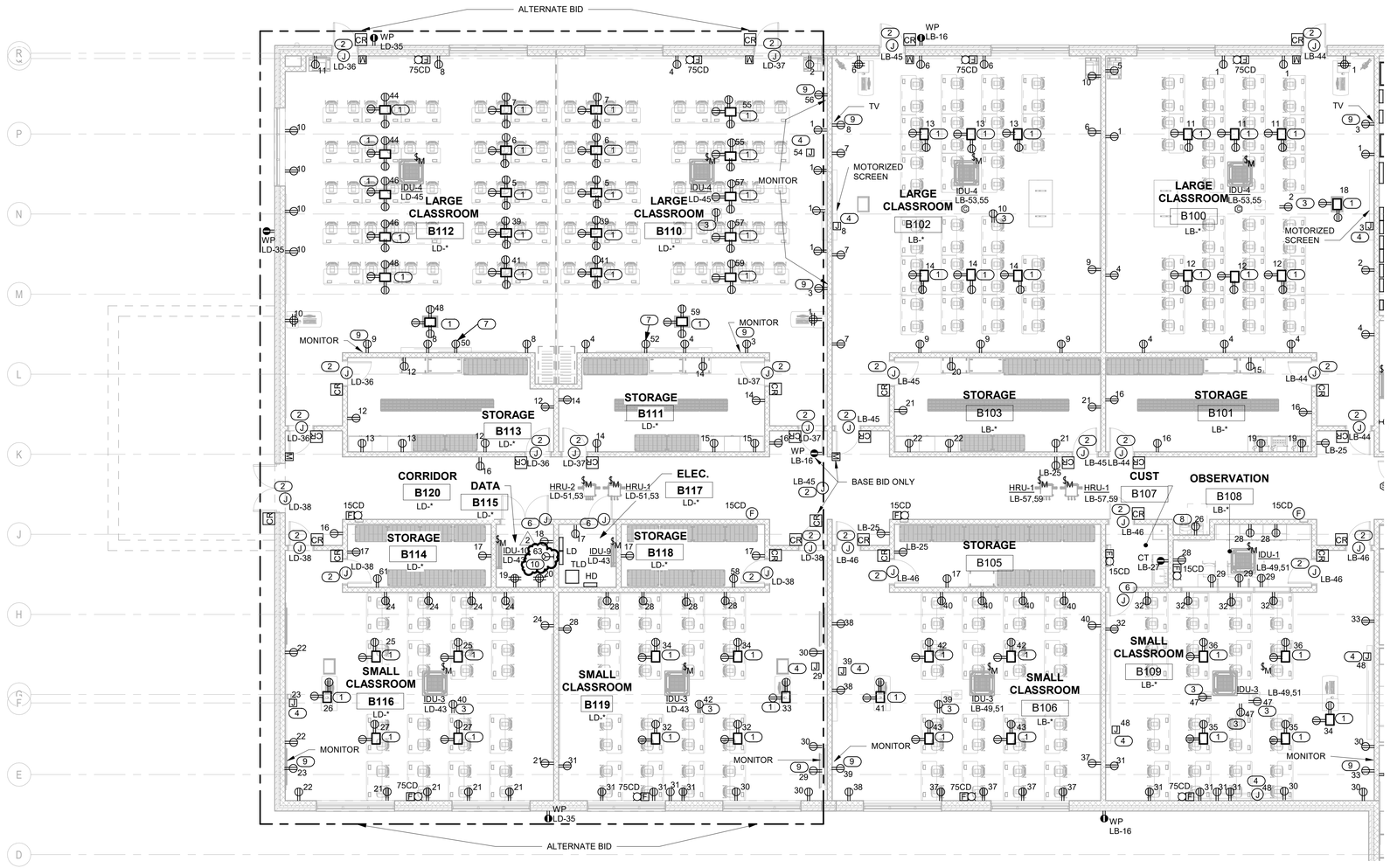

1 FIRST FLOOR PLAN - UNIT B - POWER

SCALE: 1/8" = 1'-0"

GENERAL NOTES:

1. PROVIDE 1" CONDUIT TO ALL INTERIOR DOOR FRAMES THAT ARE NOT SCHEDULED TO RECEIVE ELECTRONIC HARDWARE FOR FUTURE INSTALLATION OF CARD READERS, ETC. CONDUITS TO EXTEND FROM DOOR FRAME TO POINT ABOVE THE FINISH CEILING FOR EASY INSTALLATION OF WIRING, ETC. IN THE FUTURE.
2. SEE DETAILS FOR FLOOR AND WALL PENETRATION SEALING REQUIREMENTS. WHERE CONDUIT AND WIRE PENETRATES THE WALL, THE WALL SHALL NOT ACT AS A SUPPORT. THE RACEWAY SHALL BE INDEPENDENTLY SUPPORTED ON EACH SIDE OF THE WALL. IF THE WALL PENETRATION IS NOT SEALED, PROVIDE SLEEVE TO PROTECT RACEWAY FROM DAMAGE. WALL AND FLOOR PENETRATIONS SHALL BE CUT USING HOLE SAWS OR EQUIVALENT. PENETRATION SHALL NOT HAVE JAGGED EDGES.
3. SEE DETAILS FOR CLARIFICATION OF TYPICAL CIRCUIT DESIGNATIONS.
4. PROVIDE POWER TO ALL DOORS WITH HARDWARE REQUIRING POWER CONNECTIONS. PROVIDE CONDUITS FOR ALL DOOR HARDWARE CABLING. INSTALL ALL CABLING FURNISHED BY THE DOOR HARDWARE SUPPLIER. COORDINATE WITH THE DOOR HARDWARE SUPPLIER FOR A SPECIFIC LIST OF DOORS REQUIRING POWER AND CABLING INSTALLATION. SEE DOOR HARDWARE SCHEDULE FOR MORE INFORMATION. SEE DETAILS FOR MORE INFORMATION.
5. ALL RECEPTACLES LOCATED IN CEILING SHALL FACE INTO OCCUPIED SPACE.
6. FOR ALL RECEPTACLES NOTED AS POWERING TVS OR MONITORS, COORDINATE EXACT MOUNTING HEIGHT AND LOCATION WITH INTERIOR DRAWINGS TO ENSURE RECEPTACLE AND DATA FALL BEHIND TV. RECEPTACLES INSTALLED WITHOUT PROPER COORDINATION SHALL BE RELOCATED AT NO ADDITIONAL COST TO THE OWNER. COORDINATE LOCATION OF DATA DEVICE WITH POWER BOX. BOXES SHALL BE INSTALLED DIRECTLY ADJACENT TO EACH OTHER.
7. COORDINATE THE LOCATION OF ALL RECEPTACLES LOCATED ADJACENT TO TACK BOARDS, TACKSTRIPS, AND OTHER PERMANENT WALL FIXTURES. RECEPTACLES SHALL NOT BE LOCATED BEHIND TACK BOARDS AND TACKSTRIPS. SEE ARCHITECTURAL INTERIOR DRAWINGS FOR EXACT LOCATIONS OF TACK BOARDS AND OTHER PERMANENT WALL FIXTURES.
8. COORDINATE COUNTERTOP RECEPTACLE LOCATIONS WITH CASEWORK. ENSURE RECEPTACLES ARE NOT BEHIND TALL UNITS.
9. IN AREAS WHERE THERE IS NO CEILING OR CEILING CLOUDS, ALL DEVICES, BOXES, CONDUITS, AND APPEARANCE SHALL BE PAINTABLE. ALL CONDUIT AND WIRE SHALL BE RUN TIGHT TO THE STRCTURE. ALL LABELS FOR JUNCTION BOXES, CONDUIT, AND DEVICES WHERE EVERYTHING IS PAINTED SHALL BE INSTALLED AFTER PAINTING.
10. COORDINATE LOCATION OF ALL FIRE ALARM DEVICES WITH INTERIOR DRAWINGS BEFORE ROUGH-IN. COORDINATE SPECIFICALLY WITH SOUND PANELS, MIRRORS, TACTBOARDS, AND WHITEBOARDS.

NOTES BY SYMBOL: (#)

(THIS SHEET ONLY)

1. PROVIDE FOUR COMPARTMENT DIVIDED FLOOR BOX WITH DEVICES INDICATED. BASIS OF DESIGN: WIREMOLD EFB45 SERIES. COORDINATE EXACT LOCATION WITH ARCHITECT PRIOR TO ROUGH-IN.
2. PROVIDE POWER TO DOOR HARDWARE REQUIRING POWER. SEE DETAILS FOR MORE INFORMATION. CIRCUIT SHOWN SHALL BE USED BY ALL DOORS IN THE GENERAL AREA. FOR FIRE DOORS, PROVIDE SMOKE DETECTORS ON EITHER SIDE OF DOOR WITHIN 5' CONNECTED TO THE DOOR HARDWARE. CONNECT TO FIRE ALARM FOR DOOR RELEASE IN EMERGENCY.
3. PROVIDE CEILING MOUNTED RECEPTACLE TO POWER PROJECTOR. VERIFY EXACT LOCATION IN FIELD.
4. PROVIDE POWER FOR MOTORIZED PROJECTION SCREEN. VERIFY EXACT LOCATION IN FIELD.
5. NOT USED.
6. PROVIDE 1"C TO DOOR FRAME AND EXTEND TO 6" ABOVE ACCESSIBLE CEILING WITH PULL STRING.
7. PROVIDE RECEPTACLE FOR SHORT THROW PROJECTOR. COORDINATE EXACT MOUNTING HEIGHT IN THE FIELD.
8. RECEPTACLE FOR EWC SHALL BE INSTALLED TO ENSURE IT IS COVERED BY SKIRT. COORDINATE WITH SELECTED FIXTURE.
9. REFER TO AV DRAWINGS FOR MOUNTING HEIGHTS OF OUTLETS FOR DISPLAYS.
10. PROVIDE LOCKING 30A 120V RECEPTACLE FOR UPS. COORDINATE EXACT ROOM LAYOUT IN FIELD.

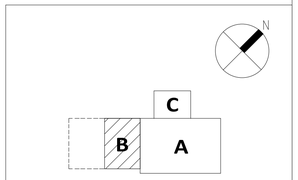

KEY PLAN

Professional Certification. I hereby certify that these documents were prepared or approved by me, and that I am a duly licensed professional engineer under the laws of the State of Maryland. License No. 49693, Expiration Date: 2020-07-24.

STATE OF MARYLAND KATHRYN PARFITT 49693 PROFESSIONAL ENGINEER

ALL REPORTS, PLANS SPECIFICATIONS AND COMPUTER FILES RELATING TO THIS PROJECT ARE THE PROPERTY OF CRABTREE, ROHRBAUGH & ASSOCIATES. CRABTREE ROHRBAUGH & ASSOCIATES RETAINS ALL COMMON LAW, STATUTE AND OTHER RESERVED RIGHTS INCLUDING THE COPYRIGHT THERETO. REPRODUCTION OF THE MATERIAL HERIN OR SUBSTANTIAL USE WITHOUT WRITTEN PERMISSION OF CRABTREE, ROHRBAUGH & ASSOCIATES VIOLATES THE COPYRIGHT LAWS OF THE UNITED STATES AND WILL BE SUBJECT TO LEGAL PROSECUTION.
© CRABTREE, ROHRBAUGH & ASSOCIATES, INC 2019

REVISIONS

#	MM-DD-YR	NAME	DESCRIPTION OF CHANGES
2	08/28/20	BIA	ADDENDUM 4

CRABTREE ROHRBAUGH & ASSOCIATES - ARCHITECTS
100 WEST ROAD, SUITE 402, TOWSON MD 21204 410-528-0272
MECHANICSBURG, PENNSYLVANIA CHARLOTTESVILLE, VIRGINIA WHITE SULPHUR SPRINGS, WEST VIRGINIA
www.cra-architects.com

PROPOSED NEW
WASHINGTON COUNTY PUBLIC SAFETY TRAINING CENTER
WASHINGTON COUNTY PROJECT NO. 28-266
18350 PUBLIC SAFETY PLACE
HAGERSTOWN, MD 21740

FIRST FLOOR PLAN - UNIT B - POWER

PLOT SCALE: 1/8" = 1'-0"

FILENAME:

DATE: December 18, 2019

PROJECT 3089

E1.1

PANEL: LA SECTION 1 BUS AMP: 200A AMPS MAIN BREAKER: 175A

MOUNTING: SURFACE PHASE: 3 WIRE: 4 VOLTAGE: 208/120 AIC: 18,000

CKT	CIRCUIT DESCRIPTION	BREAKER P	BREAKER AMP	WIRE NO	WIRE SIZE	GND SIZE	COND	LOAD KVA	KVA/PH A	KVA/PH B	KVA/PH C	LOAD KVA	COND	GND SIZE	WIRE SIZE	WIRE NO	BREAKER AMP	BREAKER P	CIRCUIT DESCRIPTION	CKT
1	REC - A116	1	20	2	12	12	3/4"	0.9	0.9			0.0					20	1	SPARE	2
3	REC - A115	1	20	2	12	12	3/4"	0.4		0.7		0.4	3/4"	12	12	2	20	1	REC - A115	4
5	REC - A115	1	20	2	12	12	3/4"	0.4			0.9	0.5	3/4"	12	12	2	20	1	REC - A114	6
7	REC - A118, A119	1	20	2	12	12	3/4"	0.5	1.3			0.7	3/4"	12	12	2	20	1	REC - A117	8
9	REC - A117	1	20	2	12	12	3/4"	0.5		1.5		1.0	3/4"	12	12	2	20	1	REC - A117 (ICE MAKER)	10
11	REC - A117 (VENDING)	1	20	2	12	12	3/4"	1.0			2.0	1.0	3/4"	12	12	2	20	1	REC - A117 (VENDING)	12
13	REC - A117 (VENDING)	1	20	2	12	12	3/4"	1.0	2.0			1.0	3/4"	12	12	2	20	1	REC - A117 (VENDING)	14
15	REC - A117 (REFRIG.)	1	20	2	12	12	3/4"	1.0		2.0		1.0	3/4"	12	12	2	20	1	REC - A117 (REFRIG.)	16
17	REC - A117 (MICRO)	1	20	2	12	12	3/4"	1.2			1.7	0.5	3/4"	12	12	2	20	1	REC - A117 (COUNTER)	18
19	REC - A117 (MICRO)	1	20	2	12	12	3/4"	1.2	2.4			1.2	3/4"	12	12	2	20	1	REC - A117 (MICRO)	20
21	REC - A113	1	20	2	12	12	3/4"	0.5		1.3		0.7	3/4"	12	12	2	20	1	REC - A113	22
23	REC - A113	1	20	2	12	12	3/4"	0.7			1.4	0.7	3/4"	12	12	2	20	1	REC - CORRIDORS	24
25	REC - A109	1	20	2	12	12	3/4"	1.1	2.2			1.1	3/4"	12	12	2	20	1	REC - A110	26
27	REC - A111	1	20	2	12	12	3/4"	0.7		1.6		0.9	3/4"	12	12	2	20	1	REC - A106, A107, A108	28
29	REC - A112	1	20	2	12	12	3/4"	0.7			1.4	0.7	3/4"	12	12	2	20	1	REC - A112	30
31	REC - A101	1	20	2	12	12	3/4"	1.1	1.8			0.7	3/4"	12	12	2	20	1	REC - A102	32
33	REC - A103	1	20	2	12	12	3/4"	1.1		1.8		0.7	3/4"	12	12	2	20	1	REC - A104	34
35	REC - A105	1	20	2	12	12	3/4"	1.0			1.5	0.5	3/4"	12	12	2	20	1	REC - A105	36
37	REC - A105	1	20	2	12	12	3/4"	0.5	1.5			1.0	3/4"	12	12	2	20	1	REC - A105 (REFRIG.) (GFI)	38
39	REC - A105	1	20	2	12	12	3/4"	0.2		1.4		1.2	3/4"	12	12	2	20	1	REC - A105 (MICRO)	40
41	GWH-1	1	20	2	12	12	3/4"	0.5			0.5	0.0	3/4"	12	12	2	20	1	GWH-1	42
								TOTAL KVA/PHASE	12.1	10.3	9.6									
								TOTAL KVA SECTION 1		31.9										
								TOTAL KVA SECTION 2		16.7										
								TOTAL KVA		48.6										
								TOTAL AMPS PANEL		135										

PANEL: LA SECTION 2 BUS AMP: 200A AMPS MAIN BREAKER: MLO

MOUNTING: SURFACE PHASE: 3 WIRE: 4 VOLTAGE: 208/120 AIC: 18,000

CKT	CIRCUIT DESCRIPTION	BREAKER P	BREAKER AMP	WIRE NO	WIRE SIZE	GND SIZE	COND	LOAD KVA	KVA/PH A	KVA/PH B	KVA/PH C	LOAD KVA	COND	GND SIZE	WIRE SIZE	WIRE NO	BREAKER AMP	BREAKER P	CIRCUIT DESCRIPTION	CKT
43	REC - C100	1	20	2	12	12	3/4"	0.7	1.4			0.7	3/4"	12	12	2	20	1	REC - C100	44
45	REC - C100	1	20	2	12	12	3/4"	0.9		1.7		0.8	3/4"	12	12	2	20	1	REC - C100	46
47	REC - C100	1	20	2	12	12	3/4"	0.4			0.7	0.4	3/4"	12	12	2	20	1	REC - C100	48
49	REC - EXTERIOR	1	20	2	12	12	3/4"	0.7	1.0			0.3	3/4"	12	12	2	20	1	DOOR HARDWARE - C-100	50
51	DOOR HARDWARE	1	20	2	12	12	3/4"	1.0		2.3		1.3	3/4"	12	12	2	20	1	DOOR HARDWARE	52
53	DOOR HARDWARE	1	20	2	12	12	3/4"	0.8			1.3	0.5	3/4"	12	12	2	20	1	FLOOR BOX	54
55	FLOOR BOX	1	20	2	12	12	3/4"	0.5	0.8			0.2	3/4"	12	12	2	15	2	HRU - A106	56
57	IDU - A117 & A141	2	15	2	12	12	3/4"	0.4		0.6		0.2								58
59								0.4			0.5	0.1	3/4"	12	12	2	15	2	HRU - A116 & A117	60
61	IDU - A114 & A115	2	15	2	12	12	3/4"	0.1	0.2			0.1								62
63								0.1		0.6		0.5	3/4"	12	12	2	20	1	REC - AV RACK RM A118	64
65	IDU - A104, A105, A109, & A110	2	15	2	12	12	3/4"	0.2			0.7	0.5	3/4"	10	10	2	30	1	REC - CORRIDOR TV	66
67								0.2	0.7			0.5	3/4"	10	10	2	30	1	UPS RACK	68
69	IDU - A101, A102, & 103	2	15	2	12	12	3/4"	0.156		0.7		0.5	3/4"	10	10	2	30	1	AV RACK	70
71								0.156			0.7	0.5	3/4"	10	10	2	30	1	AV RACK	72
73	IDU- A111 & A112	2	15	2	12	12	3/4"	0.2	0.7			0.5	3/4"	12	12	2	20	1	SECURITY RACK	74
75								0.2		0.2		0.0					20	1	SPARE	76
77	REC - A104	1	20	2	12	12	3/4"	0.5			0.5	0.0					20	1	SPARE	78
79	REC - A103	1	20	2	12	12	3/4"	0.7	1.2			0.5	3/4"	12	12	2	20	1	MOTORIZED SCREENS	80
81	REC - A102	1	20	2	12	12	3/4"	0.7		1.7		1.0	3/4"	12	12	2	20	1	ROLLER SHADES	82
83	REC - A111	1	20	2	12	12	3/4"	0.5			1.5	1.0	3/4"	12	12	2	20	1	ROLLER SHADES	84
								TOTAL KVA/PHASE	6.1	7.7	6.0									
								TOTAL KVA PANEL		19.7										
								TOTAL AMPS PANEL		55										

PANEL: LB SECTION 1 BUS AMP: 200A AMPS MAIN BREAKER: 175A

MOUNTING: SURFACE PHASE: 3 WIRE: 4 VOLTAGE: 208/120 AIC: 18,000

CKT	CIRCUIT DESCRIPTION	BREAKER P	BREAKER AMP	WIRE NO	WIRE SIZE	GND SIZE	COND	LOAD KVA	KVA/PH A	KVA/PH B	KVA/PH C	LOAD KVA	COND	GND SIZE	WIRE SIZE	WIRE NO	BREAKER AMP	BREAKER P	CIRCUIT DESCRIPTION	CKT
1	REC - B100	1	20	2	12	12	3/4"	0.7	1.3			0.5	3/4"	12	12	2	20	1	REC - B100	2
3	REC - B100	1	20	2	12	12	3/4"	1.0		1.7		0.7	3/4"	12	12	2	20	1	REC - B100	4
5	REC - B100	1	20	2	12	12	3/4"	1.0			1.7	0.7	3/4"	12	12	2	20	1	REC - B102	6
7	REC - B102	1	20	2	12	12	3/4"	0.5	1.5			1.0	3/4"	12	12	2	20	1	REC - B102	8
9	REC - B102	1	20	2	12	12	3/4"	0.7		1.7		1.0	3/4"	12	12	2	20	1	REC - B102	10
11	FLOOR REC - B100	1	20	2	12	12	3/4"	0.7			1.4	0.7	3/4"	12	12	2	20	1	FLOOR REC - B100	12
13	FLOOR REC - B102	1	20	2	12	12	3/4"	0.7	1.4			0.7	3/4"	12	12	2	20	1	FLOOR REC - B102	14
15	REC - B101	1	20	2	12	12	3/4"	0.5		0.9		0.4	3/4"	12	12	2	20	1	REC - EXTERIOR	16
17	REC - B105	1	20	2	12	12	3/4"	0.2			0.5	0.4	3/4"	12	12	2	20	1	FLOOR BOX B106	18
19	REC - B101	1	20	2	12	12	3/4"	0.4	0.9			0.5	3/4"	12	12	2	20	1	REC - B103	20
21	REC - B103	1	20	2	12	12	3/4"	0.5		0.9		0.4	3/4"	12	12	2	20	1	REC - B103	22
23	SPARE	1	20					0.0			0.0	0.0					20	1	SPARE	24
25	REC - B104	1	20	2	12	12	3/4"	0.7	1.2			0.5	3/4"	12	12	2	20	1	REC - EWC (GFI)	26
27	REC - B107	1	20	2	12	12	3/4"	0.2		0.7		0.5	3/4"	12	12	2	20	1	REC - B108	28
29	REC - B108	1	20	2	12	12	3/4"	0.5			1.1	0.5	3/4"	12	12	2	20	1	REC - B109	30
31	REC - B109	1	20	2	12	12	3/4"	0.9	1.8			0.9	3/4"	12	12	2	20	1	REC - B109	32
33	REC - B109	1	20	2	12	12	3/4"	1.0		1.4		0.4	3/4"	12	12	2	20	1	REC - B109	34
35	FLOOR REC - B109	1	20	2	12	12	3/4"	0.7			1.4	0.7	3/4"	12	12	2	20	1	FLOOR REC - B109	36
37	REC - B106	1	20	2	12	12	3/4"	0.9	1.4			0.5	3/4"	12	12	2	20	1	REC - B106	38
39	REC - B106	1	20	2	12	12	3/4"	1.0		1.9		0.9	3/4"	12	12	2	20	1	REC - B106	40
41	REC - B106	1	20	2	12	12	3/4"	0.4			1.1	0.7	3/4"	12	12	2	20	1	FLOOR REC - B106	42
								TOTAL KVA/PHASE	9.6	9.2	7.3									
								TOTAL KVA SECTION 1		26.0										
								TOTAL KVA SECTION 2		11.6										
								TOTAL KVA		37.6										
								TOTAL AMPS PANEL		104										

PANEL: LB SECTION 2 BUS AMP: 200A AMPS MAIN BREAKER: MLO

MOUNTING: SURFACE PHASE: 3 WIRE: 4 VOLTAGE: 208/120 AIC: 18,000

CKT	CIRCUIT DESCRIPTION	BREAKER P	BREAKER AMP	WIRE NO	WIRE SIZE	GND SIZE	COND	LOAD KVA	KVA/PH A	KVA/PH B	KVA/PH C	LOAD KVA	COND	GND SIZE	WIRE SIZE	WIRE NO	BREAKER AMP	BREAKER P	CIRCUIT DESCRIPTION	CKT
43	FLOOR REC - B106	1	20	2	12	12	3/4"	0.7	1.7			1.0	3/4"	12	12	2	20	1	DOOR HARDWARE	44
45	DOOR HARDWARE	1	20	2	12	12	3/4"	1.3		2.5		1.3	3/4"	12	12	2	20	1	DOOR HARDWARE	46
47	CEILING REC - PROJECTORS	1	20	2	12	12	3/4"	1.0			2.2	1.2	3/4"	12	12	2	20	1	MOTORIZED PROJECTION SCREEN	48
49	IDU - B106, B108, & B109	2	15	2	12	12	3/4"	0.2	0.7			0.5	3/4"	12	12	2	20	1	P-1	50
51								0.2		0.2		0.0					20	1	SPARE	52
53	IDU - B100 & B102	2	15	2	12	12	3/4"	0.2			0.2	0.0					20	1	SPARE	54
55								0.2	0.7			0.5	3/4"	12	12	2	20	1	C100 - MONITOR	56
57	HRU - B104	2	15	2	12	12	3/4"	0.1		0.7		0.5	3/4"	12	12	2	20	1	C100 - MONITOR	58
59								0.1			0.7	0.5	3/4"	12	12	2	20	1	C100 - MONITOR	60
61	INTERIOR LIGHTING CONTACTOR	1	20	2	12	12	3/4"	0.2	0.7			0.5	3/4"	12	12	2	20	1	C100 - MONITOR	62
63	EXTERIOR LIGHTING CONTACTOR	1	20	2	12	12	3/4"	0.2		1.3		1.1	3/4"	12	12	2	20	1	ROOF - REC	64
65	SPARE	1	20					0.0			0.0	0.0					20	1	SPARE	66
67	SPARE	1	20					0.0	0.0			0.0					20	1	SPARE	68
69	SPARE	1	20					0.0		0.0		0.0					20	1	SPARE	70
71	SPARE	1	20					0.0			0.0	0.0					20	1	SPARE	72
73	SPARE	1	20					0.0	0.0			0.0					20	1	SPARE	74
75	PREPARED SPACE	1						0.0		0.0		0.0						1	PREPARED SPACE	76
77	PREPARED SPACE	1						0.0			0.0	0.0						1	PREPARED SPACE	78
79	PREPARED SPACE	1						0.0	0.0			0.0						1	PREPARED SPACE	80
81	PREPARED SPACE	1						0.0		0.0		0.0						1	PREPARED SPACE	82
83	PREPARED SPACE	1						0.0			0.0	0.0						1	PREPARED SPACE	84
								TOTAL KVA/PHASE	3.9	4.7	3.1									
								TOTAL KVA PANEL		11.6										
								TOTAL AMPS PANEL		32										

Professional Certification. I hereby certify that these documents were prepared or approved by me, and that I am a duly Licensed Professional Engineer under the laws of the State of Maryland. License No. 49693, Expiration Date: 2020-07-24.

STATE OF MARYLAND KATHRYN PARFITT 49693 PROFESSIONAL ENGINEER

ALL REPORTS, PLANS SPECIFICATIONS AND COMPUTER FILES RELATING TO THIS PROJECT ARE THE PROPERTY OF CRABTREE, ROHRBAUGH & ASSOCIATES. CRABTREE ROHRBAUGH & ASSOCIATES RETAINS ALL COMMON LAW, STATUTE AND OTHER RESERVED RIGHTS INCLUDING THE COPYRIGHT THERETO. REPRODUCTION OF THE MATERIAL HERIN OR SUBSTANTIAL USE WITHOUT WRITTEN PERMISSION OF CRABTREE, ROHRBAUGH & ASSOCIATES VIOLATES THE COPYRIGHT LAWS OF THE UNITED STATES AND WILL BE SUBJECT TO LEGAL PROSECUTION.
© CRABTREE, ROHRBAUGH & ASSOCIATES, INC 2019

REVISIONS

#	MM-DD-YR	NAME	DESCRIPTION OF CHANGES
2	08/28/20	BIA	ADDENDUM 4

CRABTREE ROHRBAUGH & ASSOCIATES - ARCHITECTS
100 WEST ROAD, SUITE 402, TOWSON MD 21204 410-528-0272
MECHANICSBURG, PENNSYLVANIA CHARLOTTESVILLE, VIRGINIA WHITE SULPHUR SPRINGS, WEST VIRGINIA
www.cra-architects.com

PROPOSED NEW
WASHINGTON COUNTY PUBLIC SAFETY TRAINING CENTER
WASHINGTON COUNTY PROJECT NO. 28-266
18350 PUBLIC SAFETY PLACE
HAGERSTOWN, MD 21740

ELECTRICAL SCHEDULES

PLOT SCALE: AS INDICATED

FILENAME:

DATE: December 18, 2019

PROJECT 3089

E5.2

PANEL: LC SECTION 1 BUS AMP: 200A AMPS MAIN BREAKER: 175A

MOUNTING: SURFACE PHASE: 3 WIRE: 4 VOLTAGE: 208/120 AIC: 18,000

CKT	CIRCUIT DESCRIPTION	BREAKER P	BREAKER AMP	WIRE NO	WIRE SIZE	GND SIZE	COND	LOAD KVA	KVA/PH A	KVA/PH B	KVA/PH C	LOAD KVA	COND	GND SIZE	WIRE SIZE	WIRE NO	BREAKER AMP	BREAKER P	CIRCUIT DESCRIPTION	CKT
1	REC - A137, A138, & A140	1	20	2	12	12	3/4"	1.1	2.6			1.5	3/4"	12	12	2	20	1	WASHER (GFI)	2
3	REC - A139, A120	1	20	2	12	12	3/4"	1.1		3.5		2.4	3/4"	10	10	3	30	2	DRYER	4
5	REC - A135	1	20	2	12	12	3/4"	0.4			2.8	2.4								6
7	REC - A135	1	20	2	12	12	3/4"	0.4	0.9			0.5	3/4"	12	12	2	20	1	REC - A134	8
9	REC - A134	1	20	2	12	12	3/4"	0.7		1.4		0.7	3/4"	12	12	2	20	1	REC - A134	10
11	REC - A134	1	20	2	12	12	3/4"	0.7			1.4	0.4	3/4"	12	12	2	20	1	REC - A134	12
13	REC - UPS	1	30	2	10	10	3/4"	0.5	0.9			0.4	3/4"	12	12	2	20	1	REC - A134	14
15	SPARE	1	20					0.0		0.4		0.4	3/4"	12	12	2	20	1	REC - A119	16
17	REC - EWC (GFI)	1	20	2	12	12	3/4"	0.5			0.9	0.4	3/4"	12	12	2	20	1	REC - A125	18
19	REC - A124	1	20	2	12	12	3/4"	0.4	1.3			0.9	3/4"	12	12	2	20	1	REC - A126	20
21	REC - EWC (GFI)	1	20	2	12	12	3/4"	0.5		0.9		0.4	3/4"	12	12	2	20	1	REC - A121	22
23	REC - A122	1	20	2	12	12	3/4"	0.4			0.9	0.5	3/4"	12	12	2	20	1	REC - A121	24
25	REC - A122	1	20	2	12	12	3/4"	0.4	1.1			0.7	3/4"	12	12	2	20	1	REC - A123	26
27	REC - A123	1	20	2	12	12	3/4"	0.7		1.9		1.2	3/4"	12	12	2	20	1	REC - A123 (TREAD MILL)	28
29	REC - A123	1	20	2	12	12	3/4"	0.2			1.4	1.2	3/4"	12	12	2	20	1	REC - A123 (TREAD MILL)	30
31	REC - EXTERIOR	1	20	2	12	12	3/4"	0.5	1.1			0.5	3/4"	12	12	2	20	1	REC - EXTERIOR	32
33	DOOR HARDWARE	1	20	2	12	12	3/4"	1.3		2.5		1.3	3/4"	12	12	2	20	1	DOOR HARDWARE	34
35	REC - A123	1	20	2	12	12	3/4"	0.7			1.7	1.0	3/4"	12	12	2	20	1	REC - A123 (TREAD MILL)	36
37	REC - A123 (TREAD MILL)	1	20	2	12	12	3/4"	1.0	2.0			1.0	3/4"	12	12	2	20	1	REC - A123 (TREAD MILL)	38
39	HANDS FREE FAUCET / FLUSH VALVE	1	20	2	12	12	3/4"	1.2		2.0		0.8	3/4"	12	12	2	20	1	HANDS FREE FAUCET / FLUSH VALVE	40
41	HANDS FREE FAUCET / FLUSH VALVE	1	20	2	12	12	3/4"	0.8			1.7	0.9	3/4"	12	12	2	20	1	HANDS FREE FAUCET / FLUSH VALVE	42
								TOTAL KVA/PHASE	9.7	12.6	10.7									
								TOTAL KVA SECTION 1		33.0										
								TOTAL KVA SECTION 2		1.7										
								TOTAL KVA		34.7										
								TOTAL AMPS PANEL		96										

PANEL: LC SECTION 2 BUS AMP: 200A AMPS MAIN BREAKER: MLO

MOUNTING: SURFACE PHASE: 3 WIRE: 4 VOLTAGE: 208/120 AIC: 18,000

CKT	CIRCUIT DESCRIPTION	BREAKER P	BREAKER AMP	WIRE NO	WIRE SIZE	GND SIZE	COND	LOAD KVA	KVA/PH A	KVA/PH B	KVA/PH C	LOAD KVA	COND	GND SIZE	WIRE SIZE	WIRE NO	BREAKER AMP	BREAKER P	CIRCUIT DESCRIPTION	CKT
43	HANDS FREE FAUCET / FLUSH VALVE	1	20	2	12	12	3/4"	0.6	0.6			0.0					20	1	SPARE	44
45	TV RECEPTACLES - A123	1	20	2	12	12	3/4"	0.4		0.4		0.0					20	1	SPARE	46
47	REC - A126	1	20	2	12	12	3/4"	0.7			0.7	0.0					20	1	SPARE	48
49	IDU - A121 & A122	2	15	2	12	12	3/4"	0.3	0.3			0.0					20	1	SPARE	50
51								0.3		0.3		0.0					20	1	SPARE	52
53	IDU - A123	2	15	2	12	12	3/4"	0.2			0.2	0.0					20	1	SPARE	54
55								0.2	0.2			0.0					20	1	SPARE	56
57	IDU - A119, A134, A138, & A140	2	15	2	12	12	3/4"	0.2		0.2		0.0					20	1	SPARE	58
59								0.2			0.2	0.0					20	1	SPARE	60
61	HRU - A120	2	15	2	12	12	3/4"	0.3	0.3			0.0					20	1	SPARE	62
63								0.3		0.3		0.0					20	1	SPARE	64
65	IDU - A124, A125, & A126	2	15	2	12	12	3/4"	0.2			0.2	0.0					20	1	SPARE	66
67								0.2	0.2			0.0					20	1	SPARE	68
69	IDU - A135 & A136	2	15	2	12	12	3/4"	0.1		0.1		0.0					20	1	SPARE	70
71								0.1			0.1	0.0						1	PREPARED SPACE	72
73	PREPARED SPACE	1						0.0	0.0			0.0						1	PREPARED SPACE	74
75	PREPARED SPACE	1						0.0		0.0		0.0						1	PREPARED SPACE	76
77	PREPARED SPACE	1						0.0			0.0	0.0						1	PREPARED SPACE	78
79	PREPARED SPACE	1						0.0	0.0			0.0						1	PREPARED SPACE	80
81	PREPARED SPACE	1						0.0		0.0		0.0						1	PREPARED SPACE	82
83	PREPARED SPACE	1						0.0			0.0	0.0						1	PREPARED SPACE	84
								TOTAL KVA/PHASE	1.5	1.2	1.4									
								TOTAL KVA PANEL		4.2										
								TOTAL AMPS PANEL		12										

ALTERNATE BID

PANEL: LD SECTION 1 BUS AMP: 200A AMPS MAIN BREAKER: 175A

MOUNTING: SURFACE PHASE: 3 WIRE: 4 VOLTAGE: 208/120 AIC: 18,000

CKT	CIRCUIT DESCRIPTION	BREAKER P	BREAKER AMP	WIRE NO	WIRE SIZE	GND SIZE	COND	LOAD KVA	KVA/PH A	KVA/PH B	KVA/PH C	LOAD KVA	COND	GND SIZE	WIRE SIZE	WIRE NO	BREAKER AMP	BREAKER P	CIRCUIT DESCRIPTION	CKT
1	REC - B110	1	20	2	12	12	3/4"	0.9	1.9			1.0	3/4"	12	12	2	20	1	REC - B110	2
3	REC - B110	1	20	2	12	12	3/4"	0.8		1.3		0.5	3/4"	12	12	2	20	1	REC - B110	4
5	FLOOR REC - B110, B112	1	20	2	12	12	3/4"	0.7			1.4	0.7	3/4"	12	12	2	20	1	FLOOR REC - B110, B112	6
7	FLOOR REC - B110, B112	1	20	2	12	12	3/4"	0.7	1.3			0.5	3/4"	12	12	2	20	1	REC - B112	8
9	REC - B112	1	20	2	12	12	3/4"	0.8		1.7		0.9	3/4"	12	12	2	20	1	REC - B112	10
11	REC - B112	1	20	2	12	12	3/4"	1.0			1.5	0.5	3/4"	12	12	2	20	1	REC - B113	12
13	REC - B113	1	20	2	12	12	3/4"	0.4	0.9			0.5	3/4"	12	12	2	20	1	REC - B111	14
15	REC - B111	1	20	2	12	12	3/4"	0.4		0.9		0.5	3/4"	12	12	2	20	1	REC - B120	16
17	REC - B114, B117, B118	1	20	2	12	12	3/4"	0.5			0.7	0.2	3/4"	12	12	2	20	1	REC - B115	18
19	REC - B115	1	20	2	12	12	3/4"	0.4	0.7			0.4	3/4"	12	12	2	20	1	REC - B115	20
21	REC - B116	1	20	2	12	12	3/4"	0.9		1.4		0.5	3/4"	12	12	2	20	1	REC - B116	22
23	REC - B116	1	20	2	12	12	3/4"	0.8			1.7	0.9	3/4"	12	12	2	20	1	REC - B116	24
25	FLOOR REC - B116	1	20	2	12	12	3/4"	0.7	1.1			0.4	3/4"	12	12	2	20	1	FLOOR REC - B116	26
27	FLOOR REC - B116	1	20	2	12	12	3/4"	0.7		1.6		0.9	3/4"	12	12	2	20	1	REC - B119	28
29	REC - B119	1	20	2	12	12	3/4"	0.8			1.3	0.5	3/4"	12	12	2	20	1	REC - B119	30
31	REC - B119	1	20	2	12	12	3/4"	0.9	1.6			0.7	3/4"	12	12	2	20	1	FLOOR REC - B119	32
33	FLOOR REC - B119	1	20	2	12	12	3/4"	0.4		1.1		0.7	3/4"	12	12	2	20	1	FLOOR REC - B119	34
35	REC - EXTERIOR	1	20	2	12	12	3/4"	0.5			1.5	1.0	3/4"	12	12	2	20	1	DOOR HARDWARE	36
37	DOOR HARDWARE	1	20	2	12	12	3/4"	1.0	2.3			1.3	3/4"	12	12	2	20	1	DOOR HARDWARE	38
39	FLOOR REC - B110, B112	1	20	2	12	12	3/4"	0.7		0.9		0.2	3/4"	12	12	2	20	1	REC - B116	40
41	FLOOR REC - B110, B112	1	20	2	12	12	3/4"	0.7			0.9	0.2	3/4"	12	12	2	20	1	REC - B119	42
								TOTAL KVA/PHASE	9.7	8.9	9.1									
								TOTAL KVA SECTION 1		27.7										
								TOTAL KVA SECTION 2		0.7										
								TOTAL KVA		28.4										
								TOTAL AMPS PANEL		79										

PANEL: LD SECTION 2 BUS AMP: 200A AMPS MAIN BREAKER: MLO

MOUNTING: SURFACE PHASE: 3 WIRE: 4 VOLTAGE: 208/120 AIC: 18,000

CKT	CIRCUIT DESCRIPTION	BREAKER P	BREAKER AMP	WIRE NO	WIRE SIZE	GND SIZE	COND	LOAD KVA	KVA/PH A	KVA/PH B	KVA/PH C	LOAD KVA	COND	GND SIZE	WIRE SIZE	WIRE NO	BREAKER AMP	BREAKER P	CIRCUIT DESCRIPTION	CKT
43	IDU - B115, B116, B117, & B119	2	15	2	12	12	3/4"	0.2	1.0			0.7	3/4"	12	12	2	20	1	FLOOR - B112	44
45								0.2		1.0		0.7	3/4"	12	12	2	20	1	FLOOR - B112	46
47	IDU - B110 & B112	2	15	2	12	12	3/4"	0.2			0.9	0.7	3/4"	12	12	2	20	1	FLOOR - B112	48
49								0.2	0.3			0.2	3/4"	12	12	2	20	1	REC - B112	50
51	HRU - B120	2	15	2	12	12	3/4"	0.1		0.3		0.2	3/4"	12	12	2	20	1	REC - B110	52
53								0.1			0.5	0.4	3/4"	12	12	2	20	1	SCREEN - B110	54
55	FLOOR BOX B110	1	20	2	12	12	3/4"	0.7	0.9			0.2	3/4"	12	12	2	20	1	REC - B110	56
57	FLOOR BOX B110	1	20	2	12	12	3/4"	0.7		0.9		0.2	3/4"	12	12	2	20	1	REC - B118	58
59	FLOOR BOX B110	1	20	2	12	12	3/4"	0.7			0.7	0.0					20	1	SPARE	60
61	REC - B114	1	20	2	12	12	3/4"	0.2	0.2			0.0					20	1	SPARE	62
63	REC - UPS	1	30	2	10	10	3/4"	0.5		0.5		0.0					20	1	SPARE	64
65	SPARE	1	20					0.0			0.0	0.0					20	1	SPARE	66
67	SPARE	1	20					0.0	0.0			0.0					20	1	SPARE	68
69	SPARE	1	20					0.0		0.0		0.0					20	1	SPARE	70
71	PREPARED SPACE	1						0.0			0.0	0.0					20	1	SPARE	72
73	PREPARED SPACE	1						0.0	0.0			0.0					20	1	SPARE	74
75	PREPARED SPACE	1						0.0		0.0		0.0						1	PREPARED SPACE	76
77	PREPARED SPACE	1						0.0			0.0	0.0						1	PREPARED SPACE	78
79	PREPARED SPACE	1						0.0	0.0			0.0						1	PREPARED SPACE	80
81	PREPARED SPACE	1						0.0		0.0		0.0						1	PREPARED SPACE	82
83	PREPARED SPACE	1						0.0			0.0	0.0						1	PREPARED SPACE	84
								TOTAL KVA/PHASE	2.4	2.7	2.1									
								TOTAL KVA PANEL		7.2										
								TOTAL AMPS PANEL		20										

Professional Certification. I hereby certify that these documents were prepared or approved by me, and that I am a duly licensed professional engineer under the laws of the State of Maryland. License No. 49693, Expiration Date: 2020-07-24.

STATE OF MARYLAND KATHRYN PARFITT 49693 PROFESSIONAL ENGINEER

ALL REPORTS, PLANS SPECIFICATIONS AND COMPUTER FILES RELATING TO THIS PROJECT ARE THE PROPERTY OF CRABTREE, ROHRBAUGH & ASSOCIATES. CRABTREE ROHRBAUGH & ASSOCIATES RETAINS ALL COMMON LAW, STATUTE AND OTHER RESERVED RIGHTS INCLUDING THE COPYRIGHT THERETO. REPRODUCTION OF THE MATERIAL HERIN OR SUBSTANTIAL USE WITHOUT WRITTEN PERMISSION OF CRABTREE, ROHRBAUGH & ASSOCIATES VIOLATES THE COPYRIGHT LAWS OF THE UNITED STATES AND WILL BE SUBJECT TO LEGAL PROSECUTION.
© CRABTREE, ROHRBAUGH & ASSOCIATES, INC 2019

REVISIONS

#	MM-DD-YR	NAME	DESCRIPTION OF CHANGES
2	08/28/20	BIA	ADDENDUM 4

CRABTREE ROHRBAUGH & ASSOCIATES - ARCHITECTS
100 WEST ROAD, SUITE 402, TOWSON MD 21204 410-528-0272
MECHANICSBURG, PENNSYLVANIA CHARLOTTESVILLE, VIRGINIA WHITE SULPHUR SPRINGS, WEST VIRGINIA
www.cra-architects.com

PROPOSED NEW
WASHINGTON COUNTY PUBLIC SAFETY TRAINING CENTER
WASHINGTON COUNTY PROJECT NO. 28-266
18350 PUBLIC SAFETY PLACE
HAGERSTOWN, MD 21740

ELECTRICAL SCHEDULES

PLOT SCALE: AS INDICATED

FILENAME:

DATE: December 18, 2019

PROJECT 3089

E5.3

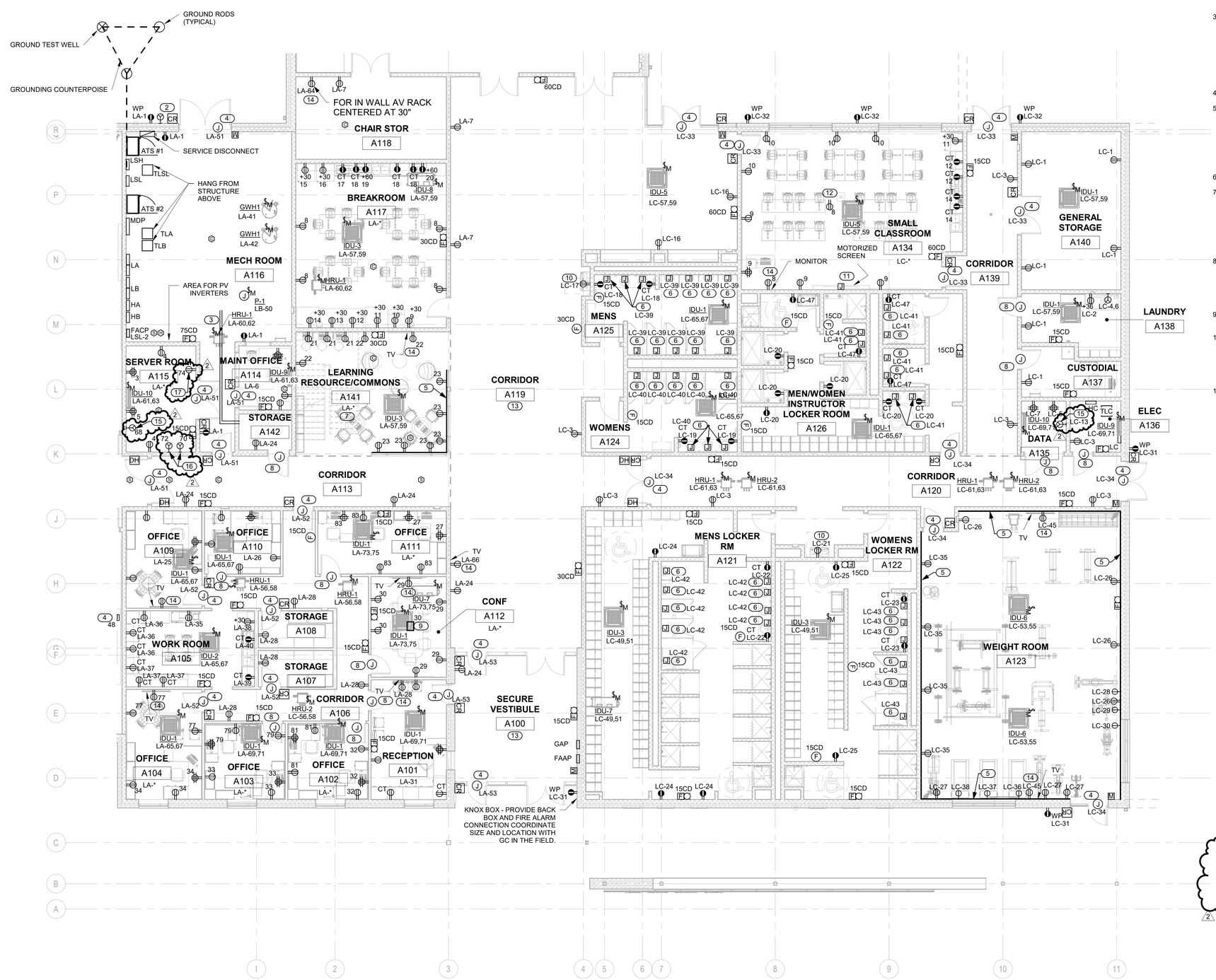

1 FIRST FLOOR PLAN - UNIT A - POWER

SCALE: 1/8" = 1'-0"

GENERAL NOTES:

1. IN OFFICE AREA PROVIDE FIRE ALARM CIRCUIT WITH 25% SPARE CAPACITY.
2. PROVIDE 1" CONDUIT TO ALL INTERIOR DOOR FRAMES THAT ARE NOT SCHEDULED TO RECEIVE ELECTRONIC HARDWARE FOR FUTURE INSTALLATION OF CARD READERS, ETC. CONDUITS TO EXTEND FROM DOOR FRAME TO POINT ABOVE THE FINISH CEILING FOR EASY INSTALLATION OF WIRING, ETC. IN THE FUTURE.
3. SEE DETAILS FOR FLOOR AND WALL PENETRATION SEALING REQUIREMENTS. WHERE CONDUIT AND WIRE PENETRATES THE WALL, THE WALL SHALL NOT ACT AS A SUPPORT. THE RACEWAY SHALL BE INDEPENDENTLY SUPPORTED ON EACH SIDE OF THE WALL. IF THE WALL PENETRATION IS NOT SEALED, PROVIDE SLEEVE TO PROTECT RACEWAY FROM DAMAGE. WALL AND FLOOR PENETRATIONS SHALL BE CUT USING HOLE SAWS OR EQUIVALENT. PENETRATION SHALL NOT HAVE JAGGED EDGES.
4. SEE DETAILS FOR CLARIFICATION OF TYPICAL CIRCUIT DESIGNATIONS.
5. PROVIDE POWER TO ALL DOORS WITH HARDWARE REQUIRING POWER CONNECTIONS. PROVIDE CONDUITS FOR ALL DOOR HARDWARE CABLING. INSTALL ALL CABLING FURNISHED BY THE DOOR HARDWARE SUPPLIER. COORDINATE WITH THE DOOR HARDWARE SUPPLIER FOR A SPECIFIC LIST OF DOORS REQUIRING POWER AND CABLING INSTALLATION. SEE DOOR HARDWARE SCHEDULE FOR MORE INFORMATION. SEE DETAILS FOR MORE INFORMATION.
6. ALL RECEPTACLES LOCATED IN CEILING SHALL FACE INTO OCCUPIED SPACE.
7. FOR ALL RECEPTACLES NOTED AS POWERING TVS OR MONITORS, COORDINATE EXACT MOUNTING HEIGHT AND LOCATION WITH INTERIOR DRAWINGS TO ENSURE RECEPTACLE AND DATA FALL BEHIND TV. RECEPTACLES INSTALLED WITHOUT PROPER COORDINATION SHALL BE RELOCATED AT NO ADDITIONAL COST TO THE OWNER. COORDINATE LOCATION OF DATA DEVICE WITH POWER BOX. BOXES SHALL BE INSTALLED DIRECTLY ADJACENT TO EACH OTHER.
8. COORDINATE THE LOCATION OF ALL RECEPTACLES LOCATED ADJACENT TO TACK BOARDS, TACKSTRIPS, AND OTHER PERMANENT WALL FIXTURES. RECEPTACLES SHALL NOT BE LOCATED BEHIND TACK BOARDS AND TACKSTRIPS. SEE ARCHITECTURAL INTERIOR DRAWINGS FOR EXACT LOCATIONS OF TACK BOARDS AND OTHER PERMANENT WALL FIXTURES.
9. COORDINATE COUNTERTOP RECEPTACLE LOCATIONS WITH CASEWORK. ENSURE RECEPTACLES ARE NOT BEHIND TALL UNITS.
10. IN AREAS WHERE THERE IS NO CEILING OR CEILING CLOUDS, ALL DEVICES, BOXES, CONDUITS, AND APPEARANCE SHALL BE PAINTABLE. ALL CONDUIT AND WIRE SHALL BE RUN TIGHT TO THE STRCTURE. ALL LABELS FOR JUNCTION BOXES, CONDUIT, AND DEVICES WHERE EVERYTHING IS PAINTED SHALL BE INSTALLED AFTER PAINTING.
11. COORDINATE LOCATION OF ALL FIRE ALARM DEVICES WITH INTERIOR DRAWINGS BEFORE ROUGH-IN. COORDINATE SPECIFICALLY WITH SOUND PANELS, MIRRORS, TACTBOARDS, AND WHITEBOARDS.

NOTES BY SYMBOL: (#)

(THIS SHEET ONLY)

1. PROVIDE TWO COMPARTMENT DIVIDED SURFACE RACEWAY NO LARGER THAN 4" HIGH ON HOLLOW METAL BASE PAINTED TO MATCH BASE. BASIS OF DESIGN: WIREMOLD AL4750.
2. PROVIDE 100A, 125/250V, 3PH, PIN AND SLEEVE RECEPTACLE. HUBBELL MODEL # M4100R12. CONFIGURATION TO MATCH MOBILE COMMAND UNIT PLUG IN WEATHER PROOF ENCLOSURE.
3. PROVIDE (1) 3" CONDUIT & (1) 1" CONDUIT FOR FUTURE ELEVATOR. PROVIDE PULL STRING.
4. PROVIDE POWER TO DOOR HARDWARE REQUIRING POWER. SEE DETAILS FOR MORE INFORMATION. CIRCUIT SHOWN SHALL BE USED BY ALL DOORS IN THE GENERAL AREA. FOR FIRE DOORS, PROVIDE SMOKE DETECTORS ON EITHER SIDE OF DOOR WITHIN 5' CONNECTED TO THE DOOR HARDWARE. CONNECT TO FIRE ALARM FOR DOOR RELEASE IN EMERGENCY.
5. PROVIDE PLUGMOLD RACEWAY WITH RECEPTACLES FINISH. SELECTED BY ARCHITECT.
6. PROVIDE 24V TRANSFORMER, POWER TO TRANSFORMER AND FINAL CONNECTION TO PLUMBING FIXTURE.
7. FOR ALL POWER WIRING FOR DEVICES IN THE CEILING OR ESLEWHERE IN THE SPACE, AN ACCESS PANEL MUST BE UTILIZED FOR ANY JUNCTION BOX LOCATIONS. THE BRANCH CIRCUIT CONDUIT SHALL BE CONCEILED BEHIND THE EPIC DECK PANELS. REFER TO EPIC DECK DETAILS ON ARCHITECTURAL PLANS FOR INSTALLATION PRACTICE FOR ELECTRICAL DEVICES AND CONDUIT. EXPOSED CONDUIT SHALL NOT BE USED.
8. PROVIDE 1"C TO DOOR FRAME AND EXTEND TO 6" ABOVE ACCESSIBLE CEILING WITH PULL STRING.
9. FLOOR BOX - PROVIDE (2) DUPLEX RECEPTACLES.
10. RECEPTACLE FOR EWC SHALL BE INSTALLED TO ENSURE IT IS COVERED BY SKIRT. COORDINATE WITH SELECTED FIXTURE.
11. PROVIDE FINAL POWER CONNECTION TO MOTORIZED SCREEN. CONTROL DEVICE PROVIDED WITH UNIT. PROVIDE ALL INTERCONNECTING WIRING.
12. PROVIDE RECEPTACLE IN CEILING FOR PROJECTOR.
13. PROVIDE COMPLETE SMOKE DETECTION COVERAGE IN THIS AREA WITH BEAM STYLE SMOKE DETECTORS.
14. REFER TO AV DRAWINGS FOR MOUNTING HEIGHTS OF OUTLETS FOR DISPLAYS.
15. PROVIDE LOCKING 30A 120V RECEPTACLE FOR UPS. COORDINATE EXACT ROOM LAYOUT IN FIELD.
16. PROVIDE (2) LOCKING 30A 120V RECEPTACLES FOR AV RACK. COORDINATE EXACT ROOM LAYOUT IN FIELD.
17. PROVIDE (1) DEDICATED 20A 120V RECEPTACLE FOR SECURITY RACK. COORDINATE EXACT ROOM LAYOUT IN FIELD.

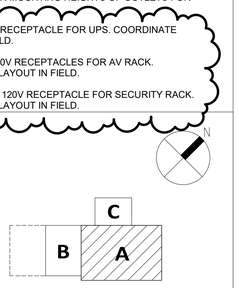

KEY PLAN

Professional Certification. I hereby certify that these documents were prepared or approved by me, and that I am a duly licensed professional engineer under the laws of the State of Maryland. License No. 49693, Expiration Date: 2020-07-24.

STATE OF MARYLAND
KATHRYN PARFITT
49693
PROFESSIONAL ENGINEER

ALL REPORTS, PLANS SPECIFICATIONS AND COMPUTER FILES RELATING TO THIS PROJECT ARE THE PROPERTY OF CRABTREE, ROHRBAUGH & ASSOCIATES. CRABTREE ROHRBAUGH & ASSOCIATES RETAINS ALL COMMON LAW, STATUTE AND OTHER RESERVED RIGHTS INCLUDING THE COPYRIGHT THERETO. REPRODUCTION OF THE MATERIAL HERIN OR SUBSTANTIAL USE WITHOUT WRITTEN PERMISSION OF CRABTREE, ROHRBAUGH & ASSOCIATES VIOLATES THE COPYRIGHT LAWS OF THE UNITED STATES AND WILL BE SUBJECT TO LEGAL PROSECUTION.
© CRABTREE, ROHRBAUGH & ASSOCIATES, INC 2019

REVISIONS

#	MM-DD-YR	NAME	DESCRIPTION OF CHANGES
2	08/28/20	BIA	ADDENDUM 4

CRABTREE ROHRBAUGH & ASSOCIATES - ARCHITECTS
100 WEST ROAD, SUITE 402, TOWSON MD 21204 410-528-0272
www.cra-architects.com
MECHANICSBURG, PENNSYLVANIA CHARLOTTESVILLE, VIRGINIA WHITE SULPHUR SPRINGS, WEST VIRGINIA

PROPOSED NEW
WASHINGTON COUNTY PUBLIC SAFETY TRAINING CENTER
WASHINGTON COUNTY PROJECT NO. 28-266
18350 PUBLIC SAFETY PLACE
HAGERSTOWN, MD 21740

FIRST FLOOR PLAN - UNIT A - POWER

PLOT SCALE: 1/8" = 1'-0"

FILENAME:

DATE: December 18, 2019

PROJECT 3089

E1.0

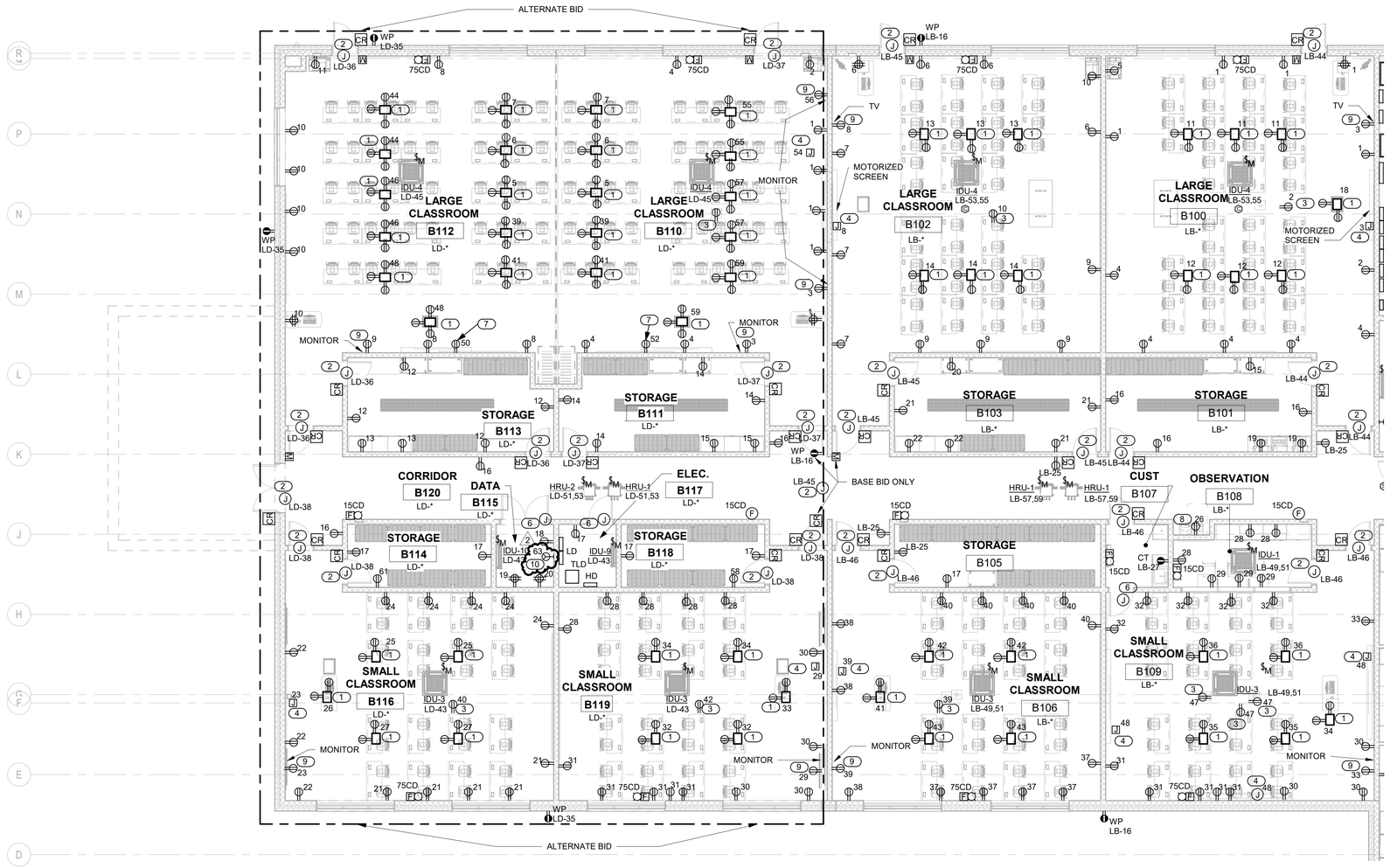

1 FIRST FLOOR PLAN - UNIT B - POWER

SCALE: 1/8" = 1'-0"

GENERAL NOTES:

1. PROVIDE 1" CONDUIT TO ALL INTERIOR DOOR FRAMES THAT ARE NOT SCHEDULED TO RECEIVE ELECTRONIC HARDWARE FOR FUTURE INSTALLATION OF CARD READERS, ETC. CONDUITS TO EXTEND FROM DOOR FRAME TO POINT ABOVE THE FINISH CEILING FOR EASY INSTALLATION OF WIRING, ETC. IN THE FUTURE.
2. SEE DETAILS FOR FLOOR AND WALL PENETRATION SEALING REQUIREMENTS. WHERE CONDUIT AND WIRE PENETRATES THE WALL, THE WALL SHALL NOT ACT AS A SUPPORT. THE RACEWAY SHALL BE INDEPENDENTLY SUPPORTED ON EACH SIDE OF THE WALL. IF THE WALL PENETRATION IS NOT SEALED, PROVIDE SLEEVE TO PROTECT RACEWAY FROM DAMAGE. WALL AND FLOOR PENETRATIONS SHALL BE CUT USING HOLE SAWS OR EQUIVALENT. PENETRATION SHALL NOT HAVE JAGGED EDGES.
3. SEE DETAILS FOR CLARIFICATION OF TYPICAL CIRCUIT DESIGNATIONS.
4. PROVIDE POWER TO ALL DOORS WITH HARDWARE REQUIRING POWER CONNECTIONS. PROVIDE CONDUITS FOR ALL DOOR HARDWARE CABLING. INSTALL ALL CABLING FURNISHED BY THE DOOR HARDWARE SUPPLIER. COORDINATE WITH THE DOOR HARDWARE SUPPLIER FOR A SPECIFIC LIST OF DOORS REQUIRING POWER AND CABLING INSTALLATION. SEE DOOR HARDWARE SCHEDULE FOR MORE INFORMATION. SEE DETAILS FOR MORE INFORMATION.
5. ALL RECEPTACLES LOCATED IN CEILING SHALL FACE INTO OCCUPIED SPACE.
6. FOR ALL RECEPTACLES NOTED AS POWERING TVS OR MONITORS, COORDINATE EXACT MOUNTING HEIGHT AND LOCATION WITH INTERIOR DRAWINGS TO ENSURE RECEPTACLE AND DATA FALL BEHIND TV. RECEPTACLES INSTALLED WITHOUT PROPER COORDINATION SHALL BE RELOCATED AT NO ADDITIONAL COST TO THE OWNER. COORDINATE LOCATION OF DATA DEVICE WITH POWER BOX. BOXES SHALL BE INSTALLED DIRECTLY ADJACENT TO EACH OTHER.
7. COORDINATE THE LOCATION OF ALL RECEPTACLES LOCATED ADJACENT TO TACK BOARDS, TACKSTRIPS, AND OTHER PERMANENT WALL FIXTURES. RECEPTACLES SHALL NOT BE LOCATED BEHIND TACK BOARDS AND TACKSTRIPS. SEE ARCHITECTURAL INTERIOR DRAWINGS FOR EXACT LOCATIONS OF TACK BOARDS AND OTHER PERMANENT WALL FIXTURES.
8. COORDINATE COUNTERTOP RECEPTACLE LOCATIONS WITH CASEWORK. ENSURE RECEPTACLES ARE NOT BEHIND TALL UNITS.
9. IN AREAS WHERE THERE IS NO CEILING OR CEILING CLOUDS, ALL DEVICES, BOXES, CONDUITS, AND APPEARANCE SHALL BE PAINTABLE. ALL CONDUIT AND WIRE SHALL BE RUN TIGHT TO THE STRCTURE. ALL LABELS FOR JUNCTION BOXES, CONDUIT, AND DEVICES WHERE EVERYTHING IS PAINTED SHALL BE INSTALLED AFTER PAINTING.
10. COORDINATE LOCATION OF ALL FIRE ALARM DEVICES WITH INTERIOR DRAWINGS BEFORE ROUGH-IN. COORDINATE SPECIFICALLY WITH SOUND PANELS, MIRRORS, TACTBOARDS, AND WHITEBOARDS.

NOTES BY SYMBOL: (#)

(THIS SHEET ONLY)

1. PROVIDE FOUR COMPARTMENT DIVIDED FLOOR BOX WITH DEVICES INDICATED. BASIS OF DESIGN: WIREMOLD EFB45 SERIES. COORDINATE EXACT LOCATION WITH ARCHITECT PRIOR TO ROUGH-IN.
2. PROVIDE POWER TO DOOR HARDWARE REQUIRING POWER. SEE DETAILS FOR MORE INFORMATION. CIRCUIT SHOWN SHALL BE USED BY ALL DOORS IN THE GENERAL AREA. FOR FIRE DOORS, PROVIDE SMOKE DETECTORS ON EITHER SIDE OF DOOR WITHIN 5' CONNECTED TO THE DOOR HARDWARE. CONNECT TO FIRE ALARM FOR DOOR RELEASE IN EMERGENCY.
3. PROVIDE CEILING MOUNTED RECEPTACLE TO POWER PROJECTOR. VERIFY EXACT LOCATION IN FIELD.
4. PROVIDE POWER FOR MOTORIZED PROJECTION SCREEN. VERIFY EXACT LOCATION IN FIELD.
5. NOT USED.
6. PROVIDE 1"C TO DOOR FRAME AND EXTEND TO 6" ABOVE ACCESSIBLE CEILING WITH PULL STRING.
7. PROVIDE RECEPTACLE FOR SHORT THROW PROJECTOR. COORDINATE EXACT MOUNTING HEIGHT IN THE FIELD.
8. RECEPTACLE FOR EWC SHALL BE INSTALLED TO ENSURE IT IS COVERED BY SKIRT. COORDINATE WITH SELECTED FIXTURE.
9. REFER TO AV DRAWINGS FOR MOUNTING HEIGHTS OF OUTLETS FOR DISPLAYS.
10. PROVIDE LOCKING 30A 120V RECEPTACLE FOR UPS. COORDINATE EXACT ROOM LAYOUT IN FIELD.

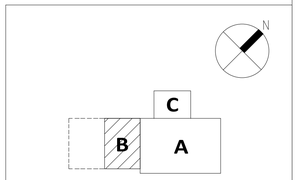

KEY PLAN

Professional Certification. I hereby certify that these documents were prepared or approved by me, and that I am a duly licensed professional engineer under the laws of the State of Maryland. License No. 49693, Expiration Date: 2020-07-24.

STATE OF MARYLAND KATHRYN PARFITT 49693 PROFESSIONAL ENGINEER

ALL REPORTS, PLANS SPECIFICATIONS AND COMPUTER FILES RELATING TO THIS PROJECT ARE THE PROPERTY OF CRABTREE, ROHRBAUGH & ASSOCIATES. CRABTREE ROHRBAUGH & ASSOCIATES RETAINS ALL COMMON LAW, STATUTE AND OTHER RESERVED RIGHTS INCLUDING THE COPYRIGHT THERETO. REPRODUCTION OF THE MATERIAL HERIN OR SUBSTANTIAL USE WITHOUT WRITTEN PERMISSION OF CRABTREE, ROHRBAUGH & ASSOCIATES VIOLATES THE COPYRIGHT LAWS OF THE UNITED STATES AND WILL BE SUBJECT TO LEGAL PROSECUTION.
© CRABTREE, ROHRBAUGH & ASSOCIATES, INC 2019

REVISIONS

#	MM-DD-YR	NAME	DESCRIPTION OF CHANGES
2	08/28/20	BIA	ADDENDUM 4

CRABTREE ROHRBAUGH & ASSOCIATES - ARCHITECTS
100 WEST ROAD, SUITE 402, TOWSON MD 21204 410-528-0272
MECHANICSBURG, PENNSYLVANIA CHARLOTTESVILLE, VIRGINIA WHITE SULPHUR SPRINGS, WEST VIRGINIA
www.cra-architects.com

PROPOSED NEW
WASHINGTON COUNTY PUBLIC SAFETY TRAINING CENTER
WASHINGTON COUNTY PROJECT NO. 28-266
18350 PUBLIC SAFETY PLACE
HAGERSTOWN, MD 21740

FIRST FLOOR PLAN - UNIT B - POWER

PLOT SCALE: 1/8" = 1'-0"

FILENAME:

DATE: December 18, 2019

PROJECT 3089

E1.1

PANEL: LA SECTION 1 BUS AMP: 200A AMPS MAIN BREAKER: 175A

MOUNTING: SURFACE PHASE: 3 WIRE: 4 VOLTAGE: 208/120 AIC: 18,000

CKT	CIRCUIT DESCRIPTION	BREAKER P	BREAKER AMP	WIRE NO	WIRE SIZE	GND SIZE	COND	LOAD KVA	KVA/PH A	KVA/PH B	KVA/PH C	LOAD KVA	COND	GND SIZE	WIRE SIZE	WIRE NO	BREAKER AMP	BREAKER P	CIRCUIT DESCRIPTION	CKT
1	REC - A116	1	20	2	12	12	3/4"	0.9	0.9			0.0					20	1	SPARE	2
3	REC - A115	1	20	2	12	12	3/4"	0.4		0.7		0.4	3/4"	12	12	2	20	1	REC - A115	4
5	REC - A115	1	20	2	12	12	3/4"	0.4			0.9	0.5	3/4"	12	12	2	20	1	REC - A114	6
7	REC - A118, A119	1	20	2	12	12	3/4"	0.5	1.3			0.7	3/4"	12	12	2	20	1	REC - A117	8
9	REC - A117	1	20	2	12	12	3/4"	0.5		1.5		1.0	3/4"	12	12	2	20	1	REC - A117 (ICE MAKER)	10
11	REC - A117 (VENDING)	1	20	2	12	12	3/4"	1.0			2.0	1.0	3/4"	12	12	2	20	1	REC - A117 (VENDING)	12
13	REC - A117 (VENDING)	1	20	2	12	12	3/4"	1.0	2.0			1.0	3/4"	12	12	2	20	1	REC - A117 (VENDING)	14
15	REC - A117 (REFRIG.)	1	20	2	12	12	3/4"	1.0		2.0		1.0	3/4"	12	12	2	20	1	REC - A117 (REFRIG.)	16
17	REC - A117 (MICRO)	1	20	2	12	12	3/4"	1.2			1.7	0.5	3/4"	12	12	2	20	1	REC - A117 (COUNTER)	18
19	REC - A117 (MICRO)	1	20	2	12	12	3/4"	1.2	2.4			1.2	3/4"	12	12	2	20	1	REC - A117 (MICRO)	20
21	REC - A113	1	20	2	12	12	3/4"	0.5		1.3		0.7	3/4"	12	12	2	20	1	REC - A113	22
23	REC - A113	1	20	2	12	12	3/4"	0.7			1.4	0.7	3/4"	12	12	2	20	1	REC - CORRIDORS	24
25	REC - A109	1	20	2	12	12	3/4"	1.1	2.2			1.1	3/4"	12	12	2	20	1	REC - A110	26
27	REC - A111	1	20	2	12	12	3/4"	0.7		1.6		0.9	3/4"	12	12	2	20	1	REC - A106, A107, A108	28
29	REC - A112	1	20	2	12	12	3/4"	0.7			1.4	0.7	3/4"	12	12	2	20	1	REC - A112	30
31	REC - A101	1	20	2	12	12	3/4"	1.1	1.8			0.7	3/4"	12	12	2	20	1	REC - A102	32
33	REC - A103	1	20	2	12	12	3/4"	1.1		1.8		0.7	3/4"	12	12	2	20	1	REC - A104	34
35	REC - A105	1	20	2	12	12	3/4"	1.0			1.5	0.5	3/4"	12	12	2	20	1	REC - A105	36
37	REC - A105	1	20	2	12	12	3/4"	0.5	1.5			1.0	3/4"	12	12	2	20	1	REC - A105 (REFRIG.) (GFI)	38
39	REC - A105	1	20	2	12	12	3/4"	0.2		1.4		1.2	3/4"	12	12	2	20	1	REC - A105 (MICRO)	40
41	GWH-1	1	20	2	12	12	3/4"	0.5			0.5	0.0	3/4"	12	12	2	20	1	GWH-1	42
								TOTAL KVA/PHASE	12.1	10.3	9.6									
								TOTAL KVA SECTION 1		31.9										
								TOTAL KVA SECTION 2		16.7										
								TOTAL KVA		48.6										
								TOTAL AMPS PANEL		135										

PANEL: LA SECTION 2 BUS AMP: 200A AMPS MAIN BREAKER: MLO

MOUNTING: SURFACE PHASE: 3 WIRE: 4 VOLTAGE: 208/120 AIC: 18,000

CKT	CIRCUIT DESCRIPTION	BREAKER P	BREAKER AMP	WIRE NO	WIRE SIZE	GND SIZE	COND	LOAD KVA	KVA/PH A	KVA/PH B	KVA/PH C	LOAD KVA	COND	GND SIZE	WIRE SIZE	WIRE NO	BREAKER AMP	BREAKER P	CIRCUIT DESCRIPTION	CKT
43	REC - C100	1	20	2	12	12	3/4"	0.7	1.4			0.7	3/4"	12	12	2	20	1	REC - C100	44
45	REC - C100	1	20	2	12	12	3/4"	0.9		1.7		0.8	3/4"	12	12	2	20	1	REC - C100	46
47	REC - C100	1	20	2	12	12	3/4"	0.4			0.7	0.4	3/4"	12	12	2	20	1	REC - C100	48
49	REC - EXTERIOR	1	20	2	12	12	3/4"	0.7	1.0			0.3	3/4"	12	12	2	20	1	DOOR HARDWARE - C-100	50
51	DOOR HARDWARE	1	20	2	12	12	3/4"	1.0		2.3		1.3	3/4"	12	12	2	20	1	DOOR HARDWARE	52
53	DOOR HARDWARE	1	20	2	12	12	3/4"	0.8			1.3	0.5	3/4"	12	12	2	20	1	FLOOR BOX	54
55	FLOOR BOX	1	20	2	12	12	3/4"	0.5	0.8			0.2	3/4"	12	12	2	15	2	HRU - A106	56
57	IDU - A117 & A141	2	15	2	12	12	3/4"	0.4		0.6		0.2								58
59								0.4			0.5	0.1	3/4"	12	12	2	15	2	HRU - A116 & A117	60
61	IDU - A114 & A115	2	15	2	12	12	3/4"	0.1	0.2			0.1								62
63								0.1		0.6		0.5	3/4"	12	12	2	20	1	REC - AV RACK RM A118	64
65	IDU - A104, A105, A109, & A110	2	15	2	12	12	3/4"	0.2			0.7	0.5	3/4"	10	10	2	30	1	REC - CORRIDOR TV	66
67								0.2	0.7			0.5	3/4"	10	10	2	30	1	UPS RACK	68
69	IDU - A101, A102, & 103	2	15	2	12	12	3/4"	0.156		0.7		0.5	3/4"	10	10	2	30	1	AV RACK	70
71								0.156			0.7	0.5	3/4"	10	10	2	30	1	AV RACK	72
73	IDU- A111 & A112	2	15	2	12	12	3/4"	0.2	0.7			0.5	3/4"	12	12	2	20	1	SECURITY RACK	74
75								0.2		0.2		0.0					20	1	SPARE	76
77	REC - A104	1	20	2	12	12	3/4"	0.5			0.5	0.0					20	1	SPARE	78
79	REC - A103	1	20	2	12	12	3/4"	0.7	1.2			0.5	3/4"	12	12	2	20	1	MOTORIZED SCREENS	80
81	REC - A102	1	20	2	12	12	3/4"	0.7		1.7		1.0	3/4"	12	12	2	20	1	ROLLER SHADES	82
83	REC - A111	1	20	2	12	12	3/4"	0.5			1.5	1.0	3/4"	12	12	2	20	1	ROLLER SHADES	84
								TOTAL KVA/PHASE	6.1	7.7	6.0									
								TOTAL KVA PANEL		19.7										
								TOTAL AMPS PANEL		55										

PANEL: LB SECTION 1 BUS AMP: 200A AMPS MAIN BREAKER: 175A

MOUNTING: SURFACE PHASE: 3 WIRE: 4 VOLTAGE: 208/120 AIC: 18,000

CKT	CIRCUIT DESCRIPTION	BREAKER P	BREAKER AMP	WIRE NO	WIRE SIZE	GND SIZE	COND	LOAD KVA	KVA/PH A	KVA/PH B	KVA/PH C	LOAD KVA	COND	GND SIZE	WIRE SIZE	WIRE NO	BREAKER AMP	BREAKER P	CIRCUIT DESCRIPTION	CKT
1	REC - B100	1	20	2	12	12	3/4"	0.7	1.3			0.5	3/4"	12	12	2	20	1	REC - B100	2
3	REC - B100	1	20	2	12	12	3/4"	1.0		1.7		0.7	3/4"	12	12	2	20	1	REC - B100	4
5	REC - B100	1	20	2	12	12	3/4"	1.0			1.7	0.7	3/4"	12	12	2	20	1	REC - B102	6
7	REC - B102	1	20	2	12	12	3/4"	0.5	1.5			1.0	3/4"	12	12	2	20	1	REC - B102	8
9	REC - B102	1	20	2	12	12	3/4"	0.7		1.7		1.0	3/4"	12	12	2	20	1	REC - B102	10
11	FLOOR REC - B100	1	20	2	12	12	3/4"	0.7			1.4	0.7	3/4"	12	12	2	20	1	FLOOR REC - B100	12
13	FLOOR REC - B102	1	20	2	12	12	3/4"	0.7	1.4			0.7	3/4"	12	12	2	20	1	FLOOR REC - B102	14
15	REC - B101	1	20	2	12	12	3/4"	0.5		0.9		0.4	3/4"	12	12	2	20	1	REC - EXTERIOR	16
17	REC - B105	1	20	2	12	12	3/4"	0.2			0.5	0.4	3/4"	12	12	2	20	1	FLOOR BOX B106	18
19	REC - B101	1	20	2	12	12	3/4"	0.4	0.9			0.5	3/4"	12	12	2	20	1	REC - B103	20
21	REC - B103	1	20	2	12	12	3/4"	0.5		0.9		0.4	3/4"	12	12	2	20	1	REC - B103	22
23	SPARE	1	20					0.0			0.0	0.0					20	1	SPARE	24
25	REC - B104	1	20	2	12	12	3/4"	0.7	1.2			0.5	3/4"	12	12	2	20	1	REC - EWC (GFI)	26
27	REC - B107	1	20	2	12	12	3/4"	0.2		0.7		0.5	3/4"	12	12	2	20	1	REC - B108	28
29	REC - B108	1	20	2	12	12	3/4"	0.5			1.1	0.5	3/4"	12	12	2	20	1	REC - B109	30
31	REC - B109	1	20	2	12	12	3/4"	0.9	1.8			0.9	3/4"	12	12	2	20	1	REC - B109	32
33	REC - B109	1	20	2	12	12	3/4"	1.0		1.4		0.4	3/4"	12	12	2	20	1	REC - B109	34
35	FLOOR REC - B109	1	20	2	12	12	3/4"	0.7			1.4	0.7	3/4"	12	12	2	20	1	FLOOR REC - B109	36
37	REC - B106	1	20	2	12	12	3/4"	0.9	1.4			0.5	3/4"	12	12	2	20	1	REC - B106	38
39	REC - B106	1	20	2	12	12	3/4"	1.0		1.9		0.9	3/4"	12	12	2	20	1	REC - B106	40
41	REC - B106	1	20	2	12	12	3/4"	0.4			1.1	0.7	3/4"	12	12	2	20	1	FLOOR REC - B106	42
								TOTAL KVA/PHASE	9.6	9.2	7.3									
								TOTAL KVA SECTION 1		26.0										
								TOTAL KVA SECTION 2		11.6										
								TOTAL KVA		37.6										
								TOTAL AMPS PANEL		104										

PANEL: LB SECTION 2 BUS AMP: 200A AMPS MAIN BREAKER: MLO

MOUNTING: SURFACE PHASE: 3 WIRE: 4 VOLTAGE: 208/120 AIC: 18,000

CKT	CIRCUIT DESCRIPTION	BREAKER P	BREAKER AMP	WIRE NO	WIRE SIZE	GND SIZE	COND	LOAD KVA	KVA/PH A	KVA/PH B	KVA/PH C	LOAD KVA	COND	GND SIZE	WIRE SIZE	WIRE NO	BREAKER AMP	BREAKER P	CIRCUIT DESCRIPTION	CKT
43	FLOOR REC - B106	1	20	2	12	12	3/4"	0.7	1.7			1.0	3/4"	12	12	2	20	1	DOOR HARDWARE	44
45	DOOR HARDWARE	1	20	2	12	12	3/4"	1.3		2.5		1.3	3/4"	12	12	2	20	1	DOOR HARDWARE	46
47	CEILING REC - PROJECTORS	1	20	2	12	12	3/4"	1.0			2.2	1.2	3/4"	12	12	2	20	1	MOTORIZED PROJECTION SCREEN	48
49	IDU - B106, B108, & B109	2	15	2	12	12	3/4"	0.2	0.7			0.5	3/4"	12	12	2	20	1	P-1	50
51								0.2		0.2		0.0					20	1	SPARE	52
53	IDU - B100 & B102	2	15	2	12	12	3/4"	0.2			0.2	0.0					20	1	SPARE	54
55								0.2	0.7			0.5	3/4"	12	12	2	20	1	C100 - MONITOR	56
57	HRU - B104	2	15	2	12	12	3/4"	0.1		0.7		0.5	3/4"	12	12	2	20	1	C100 - MONITOR	58
59								0.1			0.7	0.5	3/4"	12	12	2	20	1	C100 - MONITOR	60
61	INTERIOR LIGHTING CONTACTOR	1	20	2	12	12	3/4"	0.2	0.7			0.5	3/4"	12	12	2	20	1	C100 - MONITOR	62
63	EXTERIOR LIGHTING CONTACTOR	1	20	2	12	12	3/4"	0.2		1.3		1.1	3/4"	12	12	2	20	1	ROOF - REC	64
65	SPARE	1	20					0.0			0.0	0.0					20	1	SPARE	66
67	SPARE	1	20					0.0	0.0			0.0					20	1	SPARE	68
69	SPARE	1	20					0.0		0.0		0.0					20	1	SPARE	70
71	SPARE	1	20					0.0			0.0	0.0					20	1	SPARE	72
73	SPARE	1	20					0.0	0.0			0.0					20	1	SPARE	74
75	PREPARED SPACE	1						0.0		0.0		0.0						1	PREPARED SPACE	76
77	PREPARED SPACE	1						0.0			0.0	0.0						1	PREPARED SPACE	78
79	PREPARED SPACE	1						0.0	0.0			0.0						1	PREPARED SPACE	80
81	PREPARED SPACE	1						0.0		0.0		0.0						1	PREPARED SPACE	82
83	PREPARED SPACE	1						0.0			0.0	0.0						1	PREPARED SPACE	84
								TOTAL KVA/PHASE	3.9	4.7	3.1									
								TOTAL KVA PANEL		11.6										
								TOTAL AMPS PANEL		32										

Professional Certification. I hereby certify that these documents were prepared or approved by me, and that I am a duly Licensed Professional Engineer under the laws of the State of Maryland. License No. 49693, Expiration Date: 2020-07-24.

STATE OF MARYLAND KATHRYN PARFITT 49693 PROFESSIONAL ENGINEER

ALL REPORTS, PLANS SPECIFICATIONS AND COMPUTER FILES RELATING TO THIS PROJECT ARE THE PROPERTY OF CRABTREE, ROHRBAUGH & ASSOCIATES. CRABTREE ROHRBAUGH & ASSOCIATES RETAINS ALL COMMON LAW, STATUTE AND OTHER RESERVED RIGHTS INCLUDING THE COPYRIGHT THERETO. REPRODUCTION OF THE MATERIAL HERIN OR SUBSTANTIAL USE WITHOUT WRITTEN PERMISSION OF CRABTREE, ROHRBAUGH & ASSOCIATES VIOLATES THE COPYRIGHT LAWS OF THE UNITED STATES AND WILL BE SUBJECT TO LEGAL PROSECUTION.
© CRABTREE, ROHRBAUGH & ASSOCIATES, INC 2019

REVISIONS

#	MM-DD-YR	NAME	DESCRIPTION OF CHANGES
2	08/28/20	BIA	ADDENDUM 4

CRABTREE ROHRBAUGH & ASSOCIATES - ARCHITECTS
100 WEST ROAD, SUITE 402, TOWSON MD 21204 410-528-0272
MECHANICSBURG, PENNSYLVANIA CHARLOTTESVILLE, VIRGINIA WHITE SULPHUR SPRINGS, WEST VIRGINIA
www.cra-architects.com

PROPOSED NEW
WASHINGTON COUNTY PUBLIC SAFETY TRAINING CENTER
WASHINGTON COUNTY PROJECT NO. 28-266
18350 PUBLIC SAFETY PLACE
HAGERSTOWN, MD 21740

ELECTRICAL SCHEDULES

PLOT SCALE: AS INDICATED

FILENAME:

DATE: December 18, 2019

PROJECT 3089

E5.2

PANEL: LC SECTION 1 BUS AMP: 200A AMPS MAIN BREAKER: 175A

MOUNTING: SURFACE PHASE: 3 WIRE: 4 VOLTAGE: 208/120 AIC: 18,000

CKT	CIRCUIT DESCRIPTION	BREAKER P	BREAKER AMP	WIRE NO	WIRE SIZE	GND SIZE	COND	LOAD KVA	KVA/PH A	KVA/PH B	KVA/PH C	LOAD KVA	COND	GND SIZE	WIRE SIZE	WIRE NO	BREAKER AMP	BREAKER P	CIRCUIT DESCRIPTION	CKT
1	REC - A137, A138, & A140	1	20	2	12	12	3/4"	1.1	2.6			1.5	3/4"	12	12	2	20	1	WASHER (GFI)	2
3	REC - A139, A120	1	20	2	12	12	3/4"	1.1		3.5		2.4	3/4"	10	10	3	30	2	DRYER	4
5	REC - A135	1	20	2	12	12	3/4"	0.4			2.8	2.4								6
7	REC - A135	1	20	2	12	12	3/4"	0.4	0.9			0.5	3/4"	12	12	2	20	1	REC - A134	8
9	REC - A134	1	20	2	12	12	3/4"	0.7		1.4		0.7	3/4"	12	12	2	20	1	REC - A134	10
11	REC - A134	1	20	2	12	12	3/4"	0.7			1.4	0.4	3/4"	12	12	2	20	1	REC - A134	12
13	REC - UPS	1	30	2	10	10	3/4"	0.5	0.9			0.4	3/4"	12	12	2	20	1	REC - A134	14
15	SPARE	1	20					0.0		0.4		0.4	3/4"	12	12	2	20	1	REC - A119	16
17	REC - EWC (GFI)	1	20	2	12	12	3/4"	0.5			0.9	0.4	3/4"	12	12	2	20	1	REC - A125	18
19	REC - A124	1	20	2	12	12	3/4"	0.4	1.3			0.9	3/4"	12	12	2	20	1	REC - A126	20
21	REC - EWC (GFI)	1	20	2	12	12	3/4"	0.5		0.9		0.4	3/4"	12	12	2	20	1	REC - A121	22
23	REC - A122	1	20	2	12	12	3/4"	0.4			0.9	0.5	3/4"	12	12	2	20	1	REC - A121	24
25	REC - A122	1	20	2	12	12	3/4"	0.4	1.1			0.7	3/4"	12	12	2	20	1	REC - A123	26
27	REC - A123	1	20	2	12	12	3/4"	0.7		1.9		1.2	3/4"	12	12	2	20	1	REC - A123 (TREAD MILL)	28
29	REC - A123	1	20	2	12	12	3/4"	0.2			1.4	1.2	3/4"	12	12	2	20	1	REC - A123 (TREAD MILL)	30
31	REC - EXTERIOR	1	20	2	12	12	3/4"	0.5	1.1			0.5	3/4"	12	12	2	20	1	REC - EXTERIOR	32
33	DOOR HARDWARE	1	20	2	12	12	3/4"	1.3		2.5		1.3	3/4"	12	12	2	20	1	DOOR HARDWARE	34
35	REC - A123	1	20	2	12	12	3/4"	0.7			1.7	1.0	3/4"	12	12	2	20	1	REC - A123 (TREAD MILL)	36
37	REC - A123 (TREAD MILL)	1	20	2	12	12	3/4"	1.0	2.0			1.0	3/4"	12	12	2	20	1	REC - A123 (TREAD MILL)	38
39	HANDS FREE FAUCET / FLUSH VALVE	1	20	2	12	12	3/4"	1.2		2.0		0.8	3/4"	12	12	2	20	1	HANDS FREE FAUCET / FLUSH VALVE	40
41	HANDS FREE FAUCET / FLUSH VALVE	1	20	2	12	12	3/4"	0.8			1.7	0.9	3/4"	12	12	2	20	1	HANDS FREE FAUCET / FLUSH VALVE	42
								TOTAL KVA/PHASE	9.7	12.6	10.7									
								TOTAL KVA SECTION 1		33.0										
								TOTAL KVA SECTION 2		1.7										
								TOTAL KVA		34.7										
								TOTAL AMPS PANEL		96										

PANEL: LC SECTION 2 BUS AMP: 200A AMPS MAIN BREAKER: MLO

MOUNTING: SURFACE PHASE: 3 WIRE: 4 VOLTAGE: 208/120 AIC: 18,000

CKT	CIRCUIT DESCRIPTION	BREAKER P	BREAKER AMP	WIRE NO	WIRE SIZE	GND SIZE	COND	LOAD KVA	KVA/PH A	KVA/PH B	KVA/PH C	LOAD KVA	COND	GND SIZE	WIRE SIZE	WIRE NO	BREAKER AMP	BREAKER P	CIRCUIT DESCRIPTION	CKT
43	HANDS FREE FAUCET / FLUSH VALVE	1	20	2	12	12	3/4"	0.6	0.6			0.0					20	1	SPARE	44
45	TV RECEPTACLES - A123	1	20	2	12	12	3/4"	0.4		0.4		0.0					20	1	SPARE	46
47	REC - A126	1	20	2	12	12	3/4"	0.7			0.7	0.0					20	1	SPARE	48
49	IDU - A121 & A122	2	15	2	12	12	3/4"	0.3	0.3			0.0					20	1	SPARE	50
51								0.3		0.3		0.0					20	1	SPARE	52
53	IDU - A123	2	15	2	12	12	3/4"	0.2			0.2	0.0					20	1	SPARE	54
55								0.2	0.2			0.0					20	1	SPARE	56
57	IDU - A119, A134, A138, & A140	2	15	2	12	12	3/4"	0.2		0.2		0.0					20	1	SPARE	58
59								0.2			0.2	0.0					20	1	SPARE	60
61	HRU - A120	2	15	2	12	12	3/4"	0.3	0.3			0.0					20	1	SPARE	62
63								0.3		0.3		0.0					20	1	SPARE	64
65	IDU - A124, A125, & A126	2	15	2	12	12	3/4"	0.2			0.2	0.0					20	1	SPARE	66
67								0.2	0.2			0.0					20	1	SPARE	68
69	IDU - A135 & A136	2	15	2	12	12	3/4"	0.1		0.1		0.0					20	1	SPARE	70
71								0.1			0.1	0.0						1	PREPARED SPACE	72
73	PREPARED SPACE	1						0.0	0.0			0.0						1	PREPARED SPACE	74
75	PREPARED SPACE	1						0.0		0.0		0.0						1	PREPARED SPACE	76
77	PREPARED SPACE	1						0.0			0.0	0.0						1	PREPARED SPACE	78
79	PREPARED SPACE	1						0.0	0.0			0.0						1	PREPARED SPACE	80
81	PREPARED SPACE	1						0.0		0.0		0.0						1	PREPARED SPACE	82
83	PREPARED SPACE	1						0.0			0.0	0.0						1	PREPARED SPACE	84
								TOTAL KVA/PHASE	1.5	1.2	1.4									
								TOTAL KVA PANEL		4.2										
								TOTAL AMPS PANEL		12										

ALTERNATE BID

PANEL: LD SECTION 1 BUS AMP: 200A AMPS MAIN BREAKER: 175A

MOUNTING: SURFACE PHASE: 3 WIRE: 4 VOLTAGE: 208/120 AIC: 18,000

CKT	CIRCUIT DESCRIPTION	BREAKER P	BREAKER AMP	WIRE NO	WIRE SIZE	GND SIZE	COND	LOAD KVA	KVA/PH A	KVA/PH B	KVA/PH C	LOAD KVA	COND	GND SIZE	WIRE SIZE	WIRE NO	BREAKER AMP	BREAKER P	CIRCUIT DESCRIPTION	CKT
1	REC - B110	1	20	2	12	12	3/4"	0.9	1.9			1.0	3/4"	12	12	2	20	1	REC - B110	2
3	REC - B110	1	20	2	12	12	3/4"	0.8		1.3		0.5	3/4"	12	12	2	20	1	REC - B110	4
5	FLOOR REC - B110, B112	1	20	2	12	12	3/4"	0.7			1.4	0.7	3/4"	12	12	2	20	1	FLOOR REC - B110, B112	6
7	FLOOR REC - B110, B112	1	20	2	12	12	3/4"	0.7	1.3			0.5	3/4"	12	12	2	20	1	REC - B112	8
9	REC - B112	1	20	2	12	12	3/4"	0.8		1.7		0.9	3/4"	12	12	2	20	1	REC - B112	10
11	REC - B112	1	20	2	12	12	3/4"	1.0			1.5	0.5	3/4"	12	12	2	20	1	REC - B113	12
13	REC - B113	1	20	2	12	12	3/4"	0.4	0.9			0.5	3/4"	12	12	2	20	1	REC - B111	14
15	REC - B111	1	20	2	12	12	3/4"	0.4		0.9		0.5	3/4"	12	12	2	20	1	REC - B120	16
17	REC - B114, B117, B118	1	20	2	12	12	3/4"	0.5			0.7	0.2	3/4"	12	12	2	20	1	REC - B115	18
19	REC - B115	1	20	2	12	12	3/4"	0.4	0.7			0.4	3/4"	12	12	2	20	1	REC - B115	20
21	REC - B116	1	20	2	12	12	3/4"	0.9		1.4		0.5	3/4"	12	12	2	20	1	REC - B116	22
23	REC - B116	1	20	2	12	12	3/4"	0.8			1.7	0.9	3/4"	12	12	2	20	1	REC - B116	24
25	FLOOR REC - B116	1	20	2	12	12	3/4"	0.7	1.1			0.4	3/4"	12	12	2	20	1	FLOOR REC - B116	26
27	FLOOR REC - B116	1	20	2	12	12	3/4"	0.7		1.6		0.9	3/4"	12	12	2	20	1	REC - B119	28
29	REC - B119	1	20	2	12	12	3/4"	0.8			1.3	0.5	3/4"	12	12	2	20	1	REC - B119	30
31	REC - B119	1	20	2	12	12	3/4"	0.9	1.6			0.7	3/4"	12	12	2	20	1	FLOOR REC - B119	32
33	FLOOR REC - B119	1	20	2	12	12	3/4"	0.4		1.1		0.7	3/4"	12	12	2	20	1	FLOOR REC - B119	34
35	REC - EXTERIOR	1	20	2	12	12	3/4"	0.5			1.5	1.0	3/4"	12	12	2	20	1	DOOR HARDWARE	36
37	DOOR HARDWARE	1	20	2	12	12	3/4"	1.0	2.3			1.3	3/4"	12	12	2	20	1	DOOR HARDWARE	38
39	FLOOR REC - B110, B112	1	20	2	12	12	3/4"	0.7		0.9		0.2	3/4"	12	12	2	20	1	REC - B116	40
41	FLOOR REC - B110, B112	1	20	2	12	12	3/4"	0.7			0.9	0.2	3/4"	12	12	2	20	1	REC - B119	42
								TOTAL KVA/PHASE	9.7	8.9	9.1									
								TOTAL KVA SECTION 1		27.7										
								TOTAL KVA SECTION 2		0.7										
								TOTAL KVA		28.4										
								TOTAL AMPS PANEL		79										

PANEL: LD SECTION 2 BUS AMP: 200A AMPS MAIN BREAKER: MLO

MOUNTING: SURFACE PHASE: 3 WIRE: 4 VOLTAGE: 208/120 AIC: 18,000

CKT	CIRCUIT DESCRIPTION	BREAKER P	BREAKER AMP	WIRE NO	WIRE SIZE	GND SIZE	COND	LOAD KVA	KVA/PH A	KVA/PH B	KVA/PH C	LOAD KVA	COND	GND SIZE	WIRE SIZE	WIRE NO	BREAKER AMP	BREAKER P	CIRCUIT DESCRIPTION	CKT
43	IDU - B115, B116, B117, & B119	2	15	2	12	12	3/4"	0.2	1.0			0.7	3/4"	12	12	2	20	1	FLOOR - B112	44
45								0.2		1.0		0.7	3/4"	12	12	2	20	1	FLOOR - B112	46
47	IDU - B110 & B112	2	15	2	12	12	3/4"	0.2			0.9	0.7	3/4"	12	12	2	20	1	FLOOR - B112	48
49								0.2	0.3			0.2	3/4"	12	12	2	20	1	REC - B112	50
51	HRU - B120	2	15	2	12	12	3/4"	0.1		0.3		0.2	3/4"	12	12	2	20	1	REC - B110	52
53								0.1			0.5	0.4	3/4"	12	12	2	20	1	SCREEN - B110	54
55	FLOOR BOX B110	1	20	2	12	12	3/4"	0.7	0.9			0.2	3/4"	12	12	2	20	1	REC - B110	56
57	FLOOR BOX B110	1	20	2	12	12	3/4"	0.7		0.9		0.2	3/4"	12	12	2	20	1	REC - B118	58
59	FLOOR BOX B110	1	20	2	12	12	3/4"	0.7			0.7	0.0					20	1	SPARE	60
61	REC - B114	1	20	2	12	12	3/4"	0.2	0.2			0.0					20	1	SPARE	62
63	REC - UPS	1	30	2	10	10	3/4"	0.5		0.5		0.0					20	1	SPARE	64
65	SPARE	1	20					0.0			0.0	0.0					20	1	SPARE	66
67	SPARE	1	20					0.0	0.0			0.0					20	1	SPARE	68
69	SPARE	1	20					0.0		0.0		0.0					20	1	SPARE	70
71	PREPARED SPACE	1						0.0			0.0	0.0					20	1	SPARE	72
73	PREPARED SPACE	1						0.0	0.0			0.0					20	1	SPARE	74
75	PREPARED SPACE	1						0.0		0.0		0.0						1	PREPARED SPACE	76
77	PREPARED SPACE	1						0.0			0.0	0.0						1	PREPARED SPACE	78
79	PREPARED SPACE	1						0.0	0.0			0.0						1	PREPARED SPACE	80
81	PREPARED SPACE	1						0.0		0.0		0.0						1	PREPARED SPACE	82
83	PREPARED SPACE	1						0.0			0.0	0.0						1	PREPARED SPACE	84
								TOTAL KVA/PHASE	2.4	2.7	2.1									
								TOTAL KVA PANEL		7.2										
								TOTAL AMPS PANEL		20										

Professional Certification. I hereby certify that these documents were prepared or approved by me, and that I am a duly licensed professional engineer under the laws of the State of Maryland. License No. 49693, Expiration Date: 2020-07-24.

STATE OF MARYLAND KATHRYN PARFITT 49693 PROFESSIONAL ENGINEER

ALL REPORTS, PLANS SPECIFICATIONS AND COMPUTER FILES RELATING TO THIS PROJECT ARE THE PROPERTY OF CRABTREE, ROHRBAUGH & ASSOCIATES. CRABTREE ROHRBAUGH & ASSOCIATES RETAINS ALL COMMON LAW, STATUTE AND OTHER RESERVED RIGHTS INCLUDING THE COPYRIGHT THERETO. REPRODUCTION OF THE MATERIAL HERIN OR SUBSTANTIAL USE WITHOUT WRITTEN PERMISSION OF CRABTREE, ROHRBAUGH & ASSOCIATES VIOLATES THE COPYRIGHT LAWS OF THE UNITED STATES AND WILL BE SUBJECT TO LEGAL PROSECUTION.
© CRABTREE, ROHRBAUGH & ASSOCIATES, INC 2019

REVISIONS

#	MM-DD-YR	NAME	DESCRIPTION OF CHANGES
2	08/28/20	BIA	ADDENDUM 4

CRABTREE ROHRBAUGH & ASSOCIATES - ARCHITECTS
100 WEST ROAD, SUITE 402, TOWSON MD 21204 410-528-0272
MECHANICSBURG, PENNSYLVANIA CHARLOTTESVILLE, VIRGINIA WHITE SULPHUR SPRINGS, WEST VIRGINIA
www.cra-architects.com

PROPOSED NEW
WASHINGTON COUNTY PUBLIC SAFETY TRAINING CENTER
WASHINGTON COUNTY PROJECT NO. 28-266
18350 PUBLIC SAFETY PLACE
HAGERSTOWN, MD 21740

ELECTRICAL SCHEDULES

PLOT SCALE: AS INDICATED

FILENAME:

DATE: December 18, 2019

PROJECT 3089

E5.3

SPRINKLER SCHEDULE

SYMBOL	TYPE	MANUFACTURER	FINISH
○	UPRIGHT- W/GAURD QUICK RESPONSE	VIKING	BRASS
○ D	UPRIGHT-DRY-W/GAURD QUICK RESPONSE	VIKING	BRASS
●	CONCEALED- QUICK RESPONSE	VIKING	WHITE
● D	PENDANT-DRY- QUICK RESPONSE	VIKING	BY ARCHITECT
◀ D	SIDEWALL-DRY- QUICK RESPONSE	VIKING	BRASS
◉	PENDANT- QUICK RESPONSE	VIKING	CHROME

SPRINKLER GENERAL NOTES:

1. REFER TO PROJECT SPECIFICATIONS FOR ADDITIONAL INFORMATION.
2. A MARYLAND LICENSED SPRINKLER CONTRACTOR SHALL BE RESPONSIBLE FOR SUBMITTING FINAL SYSTEM DESIGN, HEAD LAYOUT, PIPING LAYOUT, SHOP DRAWINGS, AND HYDRAULIC CALCULATIONS TO ALL AGENCIES HAVING JURISDICTION FOR REVIEW AND APPROVAL, INCLUDING THE LOCAL BUILDING INSPECTOR. DRAWINGS AND CALCULATIONS SHALL BEAR THE SEAL OF A MD LICENSED FIRE PROTECTION ENGINEER.
3. THE BUILDING SHALL BE PROVIDED WITH A WET PIPE SYSTEM.
4. THE SPRINKLER SPACING AND LOCATIONS SHALL BE IN ACCORDANCE WITH NFPA-13 AND COORDINATED WITH ALL CEILING MOUNTED OBSTRUCTIONS SUCH AS LIGHT FIXTURES, DIFFUSERS, DUCTWORK, CEILING FANS, SPEAKERS, ETC. SPRINKLERS SHALL BE CENTERED IN THE CEILING TILES AND LOCATED SYMMETRICALLY WITH LIGHTING FIXTURES AND DIFFUSERS AS SHOWN.
5. ALL SPRINKLERS IN FINISHED SPACES SHALL BE CONCEALED WITH WHITE COVER PLATE. REFER TO PROJECT SPECIFICATIONS FOR ADDITIONAL INFORMATION.
6. THE SPRINKLER DISTRIBUTION FOR THE WET SYSTEM SYSTEM SHALL BE SCHEDULE 10 PIPE WITH ROLL GROOVED FITTINGS FOR 2 1/2" AND UP, AND SCHEDULE 40 THREADED PIPE FOR 2" AND BELOW.
7. PROVIDE INSPECTOR TEST STATIONS AT THE MOST REMOTE POINT OF THE SPRINKLER RISER.
8. THE FIRE PROTECTION CONTRACTOR SHALL REVIEW ALL PROJECT DRAWINGS AND COORDINATE THE INSTALLATION OF THE SYSTEM WITH ALL OTHER TRADES FOR THE PROJECT. NOTIFY GC AND ARCHITECT IN WRITING OF ALL CONFLICTS IMMEDIATELY, PRIOR TO FABRICATION AND INSTALLATION.
9. DO NOT INSTALL SPRINKLER PIPING OR ANY OTHER EQUIPMENT OVER ELECTRICAL PANELS AND EQUIPMENT. MAINTAIN A MINIMUM OF 36" CLEAR IN FRONT OF ELECTRICAL PANELS AND EQUIPMENT.
10. ALL MATERIALS ARE TO BE U.L. LISTED AND MEET THE PROVISIONS OF NFPA-13.
11. ALL PIPING SHALL BE SECURELY SUPPORTED FROM THE STRUCTURE BY MEANS OF A LISTED FASTENER. ALL HANGERS SHALL MEET THE PROVISIONS OF NFPA-13.
12. UPON COMPLETION ALL NEW PIPING SHALL BE HYDROSTATICALLY TESTED IN ACCORDANCE WITH NFPA-13 FOR 2 HOURS AT 200 PSI AND WITNESSED BY THE AUTHORITY HAVING JURISDICTION AND/OR THE OWNER'S REPRESENTATIVE.
13. THE ENTIRE BUILDING SHALL BE SPRINKLERED.
14. PROVIDE BUILDING FIRE DEPARTMENT CONNECTION; COORDINATE LOCATION, SIZE, AND TYPE WITH LOCAL FIRE MARSHALL AND AUTHORITY HAVING JURISDICTION.
15. ALL EXPOSED DUCTWORK AND ANY OBSTRUCTIONS OVER 4'-0 WIDE TO HAVE SPRINKLER COVERAGE BOTH ABOVE AND BELOW DUCTWORK AND OBSTRUCTION.
16. ALL FIRE PROTECTION SIGNAGE FOR FIRE DEPARTMENT CONNECTIONS TO BE APPROVED BY AHJ AND LOCAL FIRE MARSHALL.

ABBREVIATIONS

AC	AQUATICS CONTRACTOR	FFD1	FUNNELED FLOOR DRAIN	INV	INVERT OF PIPE
AD1	AREA DRAIN	FFE	FINISHED FLOOR ELEVATION	KD1	KITCHEN DRAIN
AFF	ABOVE FINISHED FLOOR	FSC	FOOD SERVICE CONTRACTOR	KS1	KITCHEN SINK
AFG	ABOVE FINISHED GRADE	FS1	FLOOR SINK	LAV1	LAVATORY
AMP	AMPERE	FLA	FULL LOAD AMPS	MAX	MAXIMUM
AP	ACCESS PANEL	FLR	FLOOR	MIN	MINIMUM
APPROX	APPROXIMATE	FPM	FOOT/FEET PER MINUTE	MS1	MOP SINK
AVG	AVERAGE	FPS	FOOT/FEET PER SECOND	MTD	MOUNTED
BFP1	REDUCED PRESSURE BACKFLOW PREVENTER	FT	FOOT/FEET	NA, N/A	NOT APPLICABLE
BOT	BOTTOM	GAL	GALLONS	NC	NORMALLY CLOSED
BP	BACK PRESSURE	GB1	GARBAGE DISPOSAL	NIC	NOT IN CONTRACT
BSMT	BASEMENT	GC	GENERAL CONTRACTOR	NO	NORMALLY OPEN
BWV1	BACK WATER VALVE	GND	GROUND	NTS	NOT TO SCALE
CI	CAST IRON	GPH	GALLONS PER HOUR	PC	PLUMBING CONTRACTOR
CL	CENTER LINE	GPM	GALLONS PER MINUTE	PT1	PLASTER TRAP
CO	CLEANOUT	GPR1	GAS PRESSURE REGULATOR	RD1	ROOF DRAIN
COL	COLUMN	GPS	GALLONS PER SECOND	SE1	SEWAGE EJECTOR
CONC	CONCRETE OR CONCENTRIC	GS1	GLASS FILLER	SH1	SHOWER
DIA, ∅	DIAMETER	GSV	GAS SOLENOID VALVE	SS1	SERVICE SINK
DIP	DUCTILE IRON PIPE	GT1	GREASE TRAP	TEMP	TEMPERATURE
DN	DOWN	HB1	HOSE BIBB	TP1	TRAP PRIMER
DN1	DOWN SPOUT NOZZLE	HC	HVAC CONTRACTOR	TUB1	TUB/SHOWER
DW1	DISHWASHER	HEWC1	HANDICAP ELECTRIC WATER COOLER	UR1	URINAL
EC	ELECTRICAL CONTRACTOR	HGT	HEIGHT	WB1	WASHER BOX
ECO1	EXTERIOR CLEANOUT	HP	HORSE POWER	WC1	WATER CLOSET
ED1	EMERGENCY OVERFLOW DRAIN	HLAV1	HANDICAP LAVATORY	WCO1	WALL CLEAN OUT
EL	ELEVATION	HS1	HAND SINK	WHA1	WATER HAMMER ARRESTER
ESP1	ELEVATOR SUMP PUMP	HSH1	HANDICAP SHOWER	WH1	WALL HYDRANT
(E), EXIST	EXISTING	HUR1	HANDICAP URINAL	WPV1	WHIRLPOOL VALVE
FD1	FLOOR DRAIN	HWC1	HANDICAP WATER CLOSET	WSV	WATER SOLENOID VALVE
		IB1	ICE MAKER BOX	VTR	VENT THROUGH ROOF

MISCELLANEOUS SYMBOLS

- POINT OF CONNECTION-NEW TO EXISTING
- POINT OF DEMOLITION CONCLUSION
- DRAWING NOTE SYMBOL
- REVISION SYMBOL
- DIRECTION OF VIEW
- SECTION NUMBER
- DRAWING ON WHICH SECTION OR DETAIL IS SHOWN
- DETAIL OR SECTION NUMBER
- DRAWING FROM WHICH SECTION OR DETAIL IS TAKEN

NOTE:
NOT ALL ABBREVIATIONS AND SYMBOLS INDICATED MAY APPEAR ON THESE CONTRACT DRAWINGS. THIS IS FOR REFERENCE ONLY.

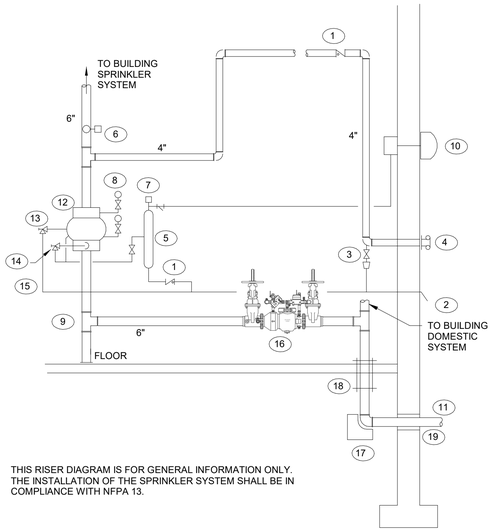

THIS RISER DIAGRAM IS FOR GENERAL INFORMATION ONLY. THE INSTALLATION OF THE SPRINKLER SYSTEM SHALL BE IN COMPLIANCE WITH NFPA 13.

1. CHECK VALVE
2. 2" DRAIN PIPED 6" ABOVE FINISHED GRADE
3. BALL DRIP
4. CHROME FIRE DEPARTMENT STORZ CONNECTION WITH "AUTO SPRINKLER" LETTERING; MOUNT AT MINIMUM 24" ABOVE FINISHED GRADE
5. RETARDING CHAMBER
6. FLOW SWITCH; WIRED BY EC
7. PRESSURE SWITCH
8. WATER GAUGE
9. PIPE SUPPORT TEE
10. WATER MOTOR ALARM
11. 6" COMBINED SERVICE MAIN
12. 6" ALARM CHECK VALVE
13. 2" MAIN DRAIN VALVE
14. ALARM TEST VALVE
15. 2" MAIN DRAIN
16. DOUBLE CHECK DETECTOR ASSEMBLY; PROVIDE TAMPER SWITCHES ON OS&Y VALVES, WIRED BY EC.
17. CONCRETE THRUST BLOCK
18. PIPE SUPPORT RODS
19. MECHANICAL PIPE SLEEVE, SEALED WATER TIGHT

WET SPRINKLER RISER DIAGRAM

NO SCALE

FIRE PROTECTION DRAWING LIST

FP0.0	FIRE PROTECTION INFORMATION SHEET
FP1.0	FIRST FLOOR PLAN - UNIT A - FIRE PROTECTION
FP1.1	FIRST FLOOR PLAN - UNIT B - FIRE PROTECTION
FP1.2	FIRST FLOOR PLAN - UNIT C - FIRE PROTECTION

Professional Certification. I hereby certify that these documents were prepared or approved by me, and that I am a duly licensed professional engineer under the laws of the State of Maryland. License No. 49693. Expiration Date: 2020-07-24.

STATE OF MARYLAND
KATHRYN PARFITT
49693
PROFESSIONAL ENGINEER

ALL REPORTS, PLANS SPECIFICATIONS AND COMPUTER FILES RELATING TO THIS PROJECT ARE THE PROPERTY OF CRABTREE, ROHRBAUGH & ASSOCIATES. CRABTREE ROHRBAUGH & ASSOCIATES RETAINS ALL COMMON LAW, STATUTE AND OTHER RESERVED RIGHTS INCLUDING THE COPYRIGHT THERETO. REPRODUCTION OF THE MATERIAL HERIN OR SUBSTANTIAL USE WITHOUT WRITTEN PERMISSION OF CRABTREE, ROHRBAUGH & ASSOCIATES VIOLATES THE COPYRIGHT LAWS OF THE UNITED STATES AND WILL BE SUBJECT TO LEGAL PROSECUTION.
© CRABTREE, ROHRBAUGH & ASSOCIATES, INC 2019

REVISIONS

#	MM-DD-YR	NAME	DESCRIPTION OF CHANGES

CRABTREE ROHRBAUGH & ASSOCIATES - ARCHITECTS
100 WEST ROAD, SUITE 402, TOWSON MD 21204 410-528-0272
www.cra-architects.com
MECHANICSBURG, PENNSYLVANIA CHARLOTTESVILLE, VIRGINIA WHITE SULPHUR SPRINGS, WEST VIRGINIA

PROPOSED NEW
WASHINGTON COUNTY PUBLIC SAFETY TRAINING CENTER
WASHINGTON COUNTY PROJECT NO. 28-266
18350 PUBLIC SAFETY PLACE
HAGERSTOWN, MD 21740

FIRE PROTECTION INFORMATION SHEET

PLOT SCALE: AS INDICATED

FILENAME:

DATE: December 18, 2019

PROJECT 3089

FP0.0

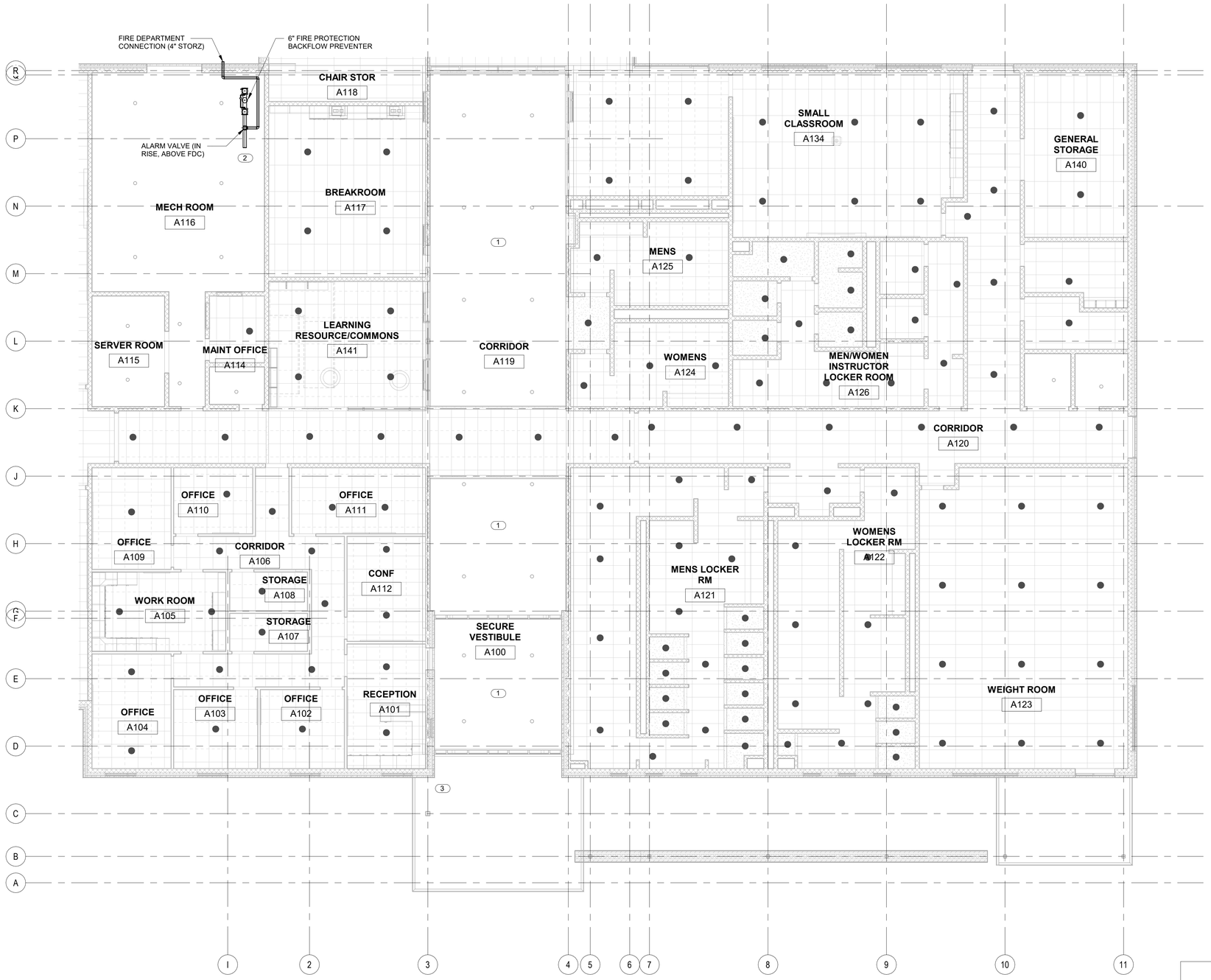

1 FIRST FLOOR PLAN - UNIT A - FIRE PROTECTION
SCALE: 1/8" = 1'-0"

NOTES BY SYMBOL: (#)
(THIS SHEET ONLY)

1. ROUTE BRANCH PIPING IN THIS AREA ALONG TRUSSES; COORDINATE WITH ARCHITECT/GC
2. PROVIDE TEE FOR MAIN TO FUTURE SECOND FLOOR
3. PROVIDE SIGN INDICATING FDC AT REAR OF BUILDING

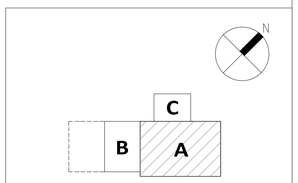

KEY PLAN

Professional Certification. I hereby certify that these documents were prepared or approved by me, and that I am a duly licensed professional engineer under the laws of the State of Maryland. License No. 49693, Expiration Date: 2020-07-24.

STATE OF MARYLAND
KATHRYN PARFITT
49693
PROFESSIONAL ENGINEER

ALL REPORTS, PLANS SPECIFICATIONS AND COMPUTER FILES RELATING TO THIS PROJECT ARE THE PROPERTY OF CRABTREE, ROHRBAUGH & ASSOCIATES. CRABTREE ROHRBAUGH & ASSOCIATES RETAINS ALL COMMON LAW, STATUTE AND OTHER RESERVED RIGHTS INCLUDING THE COPYRIGHT THERETO. REPRODUCTION OF THE MATERIAL HERIN OR SUBSTANTIAL USE WITHOUT WRITTEN PERMISSION OF CRABTREE, ROHRBAUGH & ASSOCIATES VIOLATES THE COPYRIGHT LAWS OF THE UNITED STATES AND WILL BE SUBJECT TO LEGAL PROSECUTION.
© CRABTREE, ROHRBAUGH & ASSOCIATES, INC 2019

REVISIONS

#	MM-DD-YR	NAME	DESCRIPTION OF CHANGES

CRABTREE ROHRBAUGH & ASSOCIATES - ARCHITECTS
100 WEST ROAD, SUITE 402, TOWSON MD 21204 410-528-0272
MECHANICSBURG, PENNSYLVANIA CHARLOTTESVILLE, VIRGINIA WHITE SULPHUR SPRINGS, WEST VIRGINIA
www.cra-architects.com

PROPOSED NEW
WASHINGTON COUNTY PUBLIC SAFETY TRAINING CENTER
WASHINGTON COUNTY PROJECT NO. 28-266
18350 PUBLIC SAFETY PLACE
HAGERSTOWN, MD 21740

FIRST FLOOR PLAN - UNIT A - FIRE PROTECTION

PLOT SCALE: 1/8" = 1'-0"
FILENAME:
DATE: December 18, 2019

PROJECT 3089

FP1.0

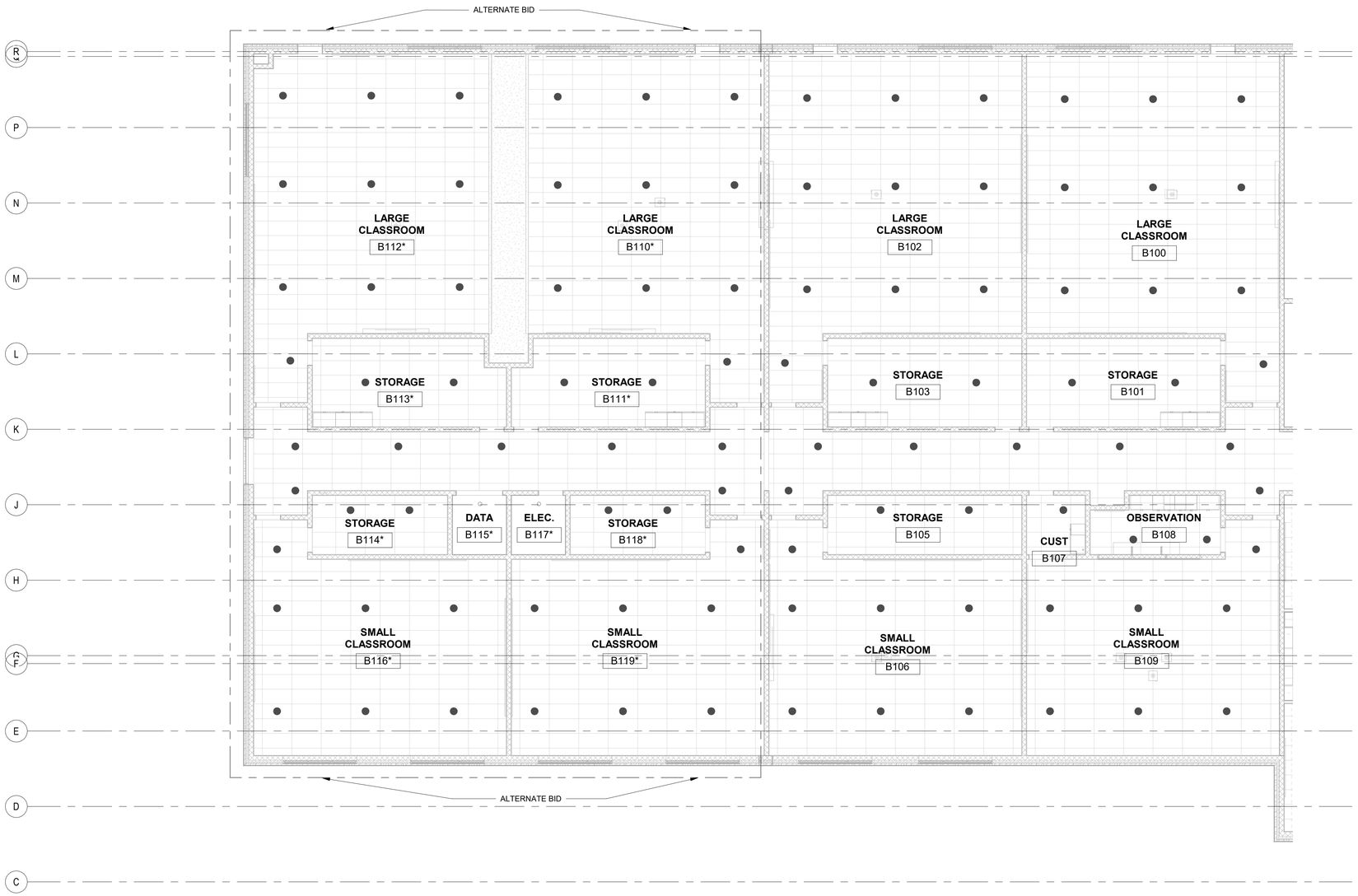

1 FIRST FLOOR PLAN - UNIT B - FIRE PROTECTION
SCALE: 1/8" = 1'-0"

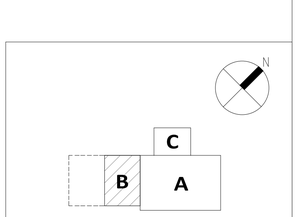

KEY PLAN

Professional Certification. I hereby certify that these documents were prepared or approved by me, and that I am a duly licensed professional engineer under the laws of the State of Maryland. License No. 49693, Expiration Date: 2020-07-24.

STATE OF MARYLAND
KATHRYN PARFITT
49693
PROFESSIONAL ENGINEER

ALL REPORTS, PLANS SPECIFICATIONS AND COMPUTER FILES RELATING TO THIS PROJECT ARE THE PROPERTY OF CRABTREE, ROHRBAUGH & ASSOCIATES. CRABTREE ROHRBAUGH & ASSOCIATES RETAINS ALL COMMON LAW, STATUTE AND OTHER RESERVED RIGHTS INCLUDING THE COPYRIGHT THERETO. REPRODUCTION OF THE MATERIAL HERIN OR SUBSTANTIAL USE WITHOUT WRITTEN PERMISSION OF CRABTREE, ROHRBAUGH & ASSOCIATES VIOLATES THE COPYRIGHT LAWS OF THE UNITED STATES AND WILL BE SUBJECT TO LEGAL PROSECUTION.
© CRABTREE, ROHRBAUGH & ASSOCIATES, INC 2019

REVISIONS

#	MM-DD-YR	NAME	DESCRIPTION OF CHANGES

CRABTREE ROHRBAUGH & ASSOCIATES - ARCHITECTS
100 WEST ROAD, SUITE 402, TOWSON MD 21204 410-528-0272
www.cra-architects.com
MECHANICSBURG, PENNSYLVANIA CHARLOTTESVILLE, VIRGINIA WHITE SULPHUR SPRINGS, WEST VIRGINIA

PROPOSED NEW
WASHINGTON COUNTY PUBLIC SAFETY TRAINING CENTER
WASHINGTON COUNTY PROJECT NO. 28-266
18350 PUBLIC SAFETY PLACE
HAGERSTOWN, MD 21740

CR

FIRST FLOOR PLAN - UNIT B - FIRE PROTECTION

PLOT SCALE: 1/8" = 1'-0"

FILENAME:

DATE: December 18, 2019

PROJECT
3089

FP1.1

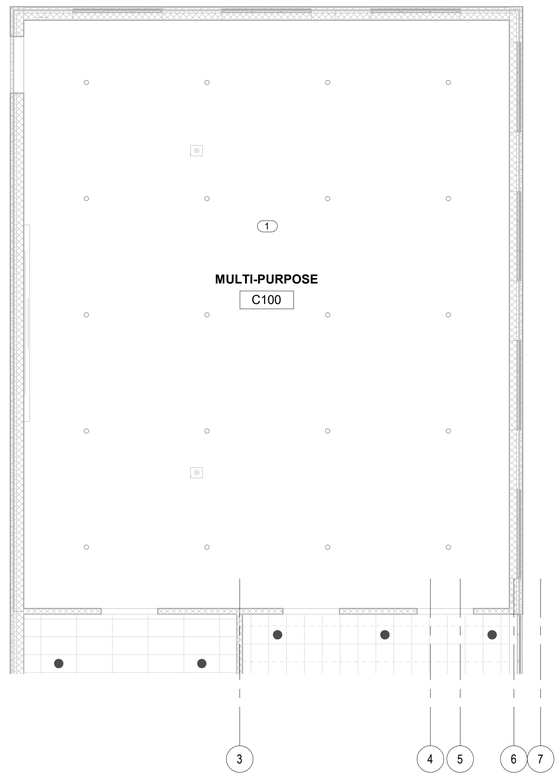

1 FIRST FLOOR PLAN - UNIT C - FIRE PROTECTION
SCALE: 1/8" = 1'-0"

NOTES BY SYMBOL: (#)
(THIS SHEET ONLY)

1. ROUTE BRANCH PIPING IN THIS AREA ALONG TRUSSES; COORDINATE WITH ARCHITECT/GC

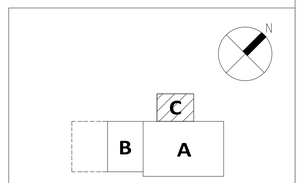

KEY PLAN

Professional Certification. I hereby certify that these documents were prepared or approved by me, and that I am a duly licensed professional engineer under the laws of the State of Maryland. License No. 49693, Expiration Date: 2020-07-24.

STATE OF MARYLAND
KATHRYN PARETTI
49693
PROFESSIONAL ENGINEER

ALL REPORTS, PLANS SPECIFICATIONS AND COMPUTER FILES RELATING TO THIS PROJECT ARE THE PROPERTY OF CRABTREE, ROHRBAUGH & ASSOCIATES. CRABTREE ROHRBAUGH & ASSOCIATES RETAINS ALL COMMON LAW, STATUTE AND OTHER RESERVED RIGHTS INCLUDING THE COPYRIGHT THERETO. REPRODUCTION OF THE MATERIAL HERIN OR SUBSTANTIAL USE WITHOUT WRITTEN PERMISSION OF CRABTREE, ROHRBAUGH & ASSOCIATES VIOLATES THE COPYRIGHT LAWS OF THE UNITED STATES AND WILL BE SUBJECT TO LEGAL PROSECUTION.
© CRABTREE, ROHRBAUGH & ASSOCIATES, INC 2019

REVISIONS

#	MM-DD-YR	NAME	DESCRIPTION OF CHANGES

CRABTREE ROHRBAUGH & ASSOCIATES - ARCHITECTS
100 WEST ROAD, SUITE 402, TOWSON MD 21204 410-528-0272
www.cra-architects.com
MECHANICSBURG, PENNSYLVANIA CHARLOTTESVILLE, VIRGINIA WHITE SULPHUR SPRINGS, WEST VIRGINIA

PROPOSED NEW
WASHINGTON COUNTY PUBLIC SAFETY TRAINING CENTER
WASHINGTON COUNTY PROJECT NO. 28-266
18350 PUBLIC SAFETY PLACE
HAGERSTOWN, MD 21740

FIRST FLOOR PLAN - UNIT C - FIRE PROTECTION

PLOT SCALE: 1/8" = 1'-0"
FILENAME:
DATE: December 18, 2019

PROJECT
3089

FP1.2

GENERAL NOTES

1. CONTRACT DRAWINGS ARE DIAGRAMMATIC AND INDICATE THE RELATION OF PIPING, DUCTWORK, CONNECTIONS, AND EQUIPMENT. THE DRAWINGS DO NOT INDICATE ALL OFFSETS, ELBOWS, AND FITTINGS THAT MAY BE REQUIRED. THEREFORE, THE CONTRACTOR SHALL CAREFULLY INVESTIGATE THE STRUCTURAL AND FINISH CONDITIONS AFFECTING THE WORK AND ACTUAL EQUIPMENT PROVIDED. THE CONTRACTOR SHALL FURNISH ALL OFFSETS, ELBOWS, FITTINGS, HANGERS, AND ACCESSORIES AS MAY BE REQUIRED TO MEET THESE CONDITIONS AT NO ADDITIONAL COST TO THE OWNER
2. INSTALL ALL EQUIPMENT AND MATERIALS IN STRICT ACCORDANCE WITH THE CURRENTLY ADOPTED INTERNATIONAL MECHANICAL CODE, ALL PERTINENT CODES, LAWS, ORDINANCES, REGULATIONS, AND RESPECTIVE MANUFACTURER'S WRITTEN INSTRUCTIONS.
3. ALL DUCTWORK SHALL BE CONSTRUCTED AND INSTALLED IN STRICT ACCORDANCE WITH SMACNA AND ASHRAE STANDARDS.
4. COORDINATE HVAC WORK WITH THE WORK OF ALL OTHER CONTRACTORS AND OWNER.
5. THE HVAC CONTRACTOR SHALL ARRANGE THE PROGRESS OF HIS WORK SO AS TO CONFORM TO THE PROGRESS OF THE TRADES AND SHALL COMPLETE THE ENTIRE INSTALLATION AS SOON AS THE CONDITION OF THE PROJECT WILL PERMIT.
6. ALL ITEMS OF LABOR, MATERIAL, AND EQUIPMENT NOT SPECIFICALLLY DESCRIBED HEREIN NOR DETAILED ON THE DRAWINGS BUT INCIDENTAL TO OR NECESSARY FOR THE COMPLETION OF THE WORK, SHALL BE CONSIDERED AS INCLUDED WITHOUT EXTRA COST.
7. COORDINATE EXACT LOCATIONS OF DIFFUSERS/DUCTWORK WITH LIGHTS, SPRINKLERS, AND CEILING WITH REFLECTED CEILING PLAN AND ARCHITECT.
8. PROVIDE INDIVIDUAL VOLUME DAMPERS FOR BALANCING ON ALL SUPPLY, RETURN, RELIEF, AND EXHAUST MAIN BRANCH AND BRANCH TAKE-OFFS. LOCATE VOLUME DAMPER AS CLOSE AS POSSSIBLE TO TAKE OFF POINTS. PROVIDE CABLE CONTROL VOLUME DAMPERS FOR ALL INACCESSIBLE CEILINGS.
9. PROVIDE ADEQUATE CLEARANCE FOR ALL UNIT CONTROLS.
10. MOUNT ALL SPACE SENSING DEVICES AT 48" AFF, COORDINATE ALL LOCATIONS WITH ARCHITECT PRIOR TO ROUGH-IN AND INSTALLATION.
11. PROVIDE PROTECTION FOR ALL PENETRATIONS OF FIRE RESISTANCE RATED ASSEMBLIES IN ACCORDANCE WITH THE REQUIREMENTS OF THE CURRENTLY ADOPTED INTERNATIONAL BUILDING CODE.
12. REFER TO ARCHITECTURAL REFLECTED CEILING PLANS FOR CEILING TYPES. PROVIDE APPROPRIATE FRAMES AND MOUNTING HARDWARE FOR ALL AIR DEVICES.
13. ROUTE EQUIPMENT DRAIN PIPING TO FLOOR DRAINS TO PREVENT TRIPPING HAZARDS. DO NOT INSTALL PIPING ON FLOOR IN ANY EQUIPMENT ACCESS AISLES.
14. PROVIDE DOUBLE WALL INSULATED ACCESS DOORS IN ALL INSULATED DUCTWORK AND SINGLE WALL ACCESS DOORS IN UN-INSULATED DUCTWORK FOR FIRE DAMPER, SMOKE DAMPER, AND REHEAT COIL INSPECTION AND SERVICE.
15. NO PIPING OR DUCTWORK FOREIGN TO ELECTRICAL, DATA, OR ELEVATOR MACHINE ROOMS IS PERMITTED TO BE INSTALLED IN THESE SPACES.
16. ALL INDOOR FLOOR MOUNTED MECHANICAL EQUIPMENT SHALL BE MOUNTED ON 4" MINIMUM HOUSEKEEPING PAD.
17. PROVIDED ALL PIPING, VALVING & EQUIPMENT SHOWN ON FLOW DIAGRAMS AND DETAILS EVEN IF NOT SHOWN ON FLOOR PLANS.
18. PROVIDE FIRE DAMPERS AND SMOKE DAMPERS AS INDICATED ON FLOOR PLANS, AND WHERE REQUIRED BY APPLICABLE CODES AT RATED CONSTRUCTION.
19. EC SHALL FURNISH DUCT SMOKE DETECTORS, MC SHALL INSTALL THEM AND A.T.C. CONTRACTOR SHALL WIRE THEM TO AIR HANDLING UNIT STARTERS / VFD'S. EC TO WIRE DUCT SMOKE DETECTORS TO FIRE ALARM SYSTEM.
20. WHERE PLENUM RETURN AIR SYSTEM ARE USED, PROVIDE ONLY MATERIALS IN THE CEILING THAT ARE APPROVED FOR AIR PLENUM USE.
21. PROVIDE ACCESS PANELS FOR ALL VALVES AND DAMPERS ABOVE INACCESSIBLE CEILINGS, ACCESS PANEL TO BE A MINIMUM OF 12"X12", COORDINATE FINAL LOCATION WITH REFLECTED CEILING PLAN.
22. PROVIDE WOOD BLOCKING FOR ALL ROOF CURBS; COORDINATE WITH GC.
23. UNCONDITIONALLY GUARANTEE IN WRITING ALL MATERIALS, EQUIPMENT, AND WORKMANSHIP FOR A PERIOD OF ON YEAR FROM THE DATE OF ACCEPTANCE BY OWNER.
24. SUBMIT TO THE ARCHITECT/ENGINEER AS-BUILT DRAWINGS AND OPERATION AND MAINTENANCE MANUALS INCLUDING ALL NAMEPLATE DATA, WIRING DIAGRAMS, MAINTENANCE INSTRUCTIONS, AND PARTS LIST UPON PROJECT COMPLETION.
25. MAINTAIN A CLEAN AND SAFE WORK AREA AT ALL TIMES. ALL SAFETY PROCEDURES AND ENFORCEMENT IS THE RESPONSIBILITY OF THE CONTRACTOR; CONFORM TO ALL OSHA STANDARDS.

MISCELLANEOUS SYMBOLS

- T — THERMOSTAT
- H — HUMIDISTAT
- S — SWITCH
- VFD (VARIABLE FREQUENCY DRIVE)
- POINT OF CONNECTION-NEW TO EXISTING
- POINT OF DEMOLITION CONCLUSION
- # — DRAWING NOTE SYMBOL
- S* — DESIGNATES SUPPLY DIFFUSER TYPE IN AREA
- R* — DESIGNATES RETURN DIFFUSER TYPE IN AREA
- E* — DESIGNATES EXHAUST GRILLE TYPE IN AREA
- # — REVISION SYMBOL
- DIRECTION OF VIEW
- # — SECTION NUMBER
- # — DRAWING ON WHICH SECTION OR DETAIL IS SHOWN
- # — DETAIL OR SECTION NUMBER
- # — DRAWING FROM WHICH SECTION OR DETAIL IS TAKEN

ABBREVIATIONS

A/C	AIR CONDITIONING	INSUL	INSULATION
AFF	ABOVE FINISHED FLOOR	INTL	INTERNAL
AFG	ABOVE FINISHED GRADE	LAT	LEAVING AIR TEMPERATURE
AL	ALUMINUM	LBS	POUNDS
AMB	AMBIENT	LIN	LINEAL
AMP	AMPERE	LP	LOW PRESSURE
AP	ACCESS PANEL	LRA	LOCKED ROTOR AMPS
APROX	APPROXIMATE	LVL	LEVEL
ARR	ARRANGEMENT	LVR	LOUVER
ATC	AUTOMATIC TEMPERATURE CONTROL	LWT	LEAVING WATER TEMPERATURE
AUTO.	AUTOMATIC	MAN.	MANUAL
AUX	AUXILIARY	MAX	MAXIMUM
AVG	AVERAGE		
BBD	BOILER BLOW DOWN	MBH	THOUSAND BRITISH THERMAL UNITS PER HOUR
BF	BOILER FEED		
BHP	BOILER HORSEPOWER OR BRAKE HORSEPOWER	MU	MAKEUP
		MIN	MINIMUM
BOD	BOTTOM OF DUCT	MOD.	MODEL
BOP	BOTTOM OF PIPE	MOUNT.	MOUNTING
BOT	BOTTOM	MTD	MOUNTED
BP	BACK PRESSURE	NA	NOT APPLICABLE
BSMT	BASEMENT	NC	NORMALLY CLOSED
BTU	BRITISH THERMAL UNIT	NEG	NEGATIVE
C TO C	CENTER TO CENTER	NIC	NOT IN CONTRACT
CA	COMPRESSED AIR	NO	NORMALLY OPEN
CAP.	CAPACITY CHEMICAL FEED CUBIC FOOT (FEET) PER MINUTE	NTS	NOT TO SCALE
		OA	OUTSIDE AIR
		OED	OPEN END DUCT
CI	CAST IRON	OF	OVERFLOW
CL	CENTER LINE	OFCI	OWNER FURNISHED CONTRACTOR INSTALLED
CO	CLEANOUT		
COL	COLUMN	OV	OUTLET VELOCITY
CONC	CONCRETE OR CONCENTRIC	PCR	PUMPED CONDENSATE RETURN
CONN	CONNECT OR CONNECTION		
CONT	CONTINUATION	PD	PRESSURE DROP
CTR	CENTER	PG	PRESSURE GAUGE
CF	CUBIC FOOT (FEET)	PL	PLATE
D	DRAIN OR DEEP	PNEU	PNEUMATIC
DB	DRY BULB	PRESS.	PRESSURE
DDC	DIRECT DIGITAL CONTROL	PROP.	PROPELLER
		PSIG	POUNDS PER SQUARE INCH GAUGE
DEG	DEGREE		
DET	DETAIL	QTY	QUANTITY
DIA,∅	DIAMETER	RECOV	RECOVERY
DISC.	DISCONNECT	REF	REFERENCE
DN	DOWN	REQD	REQUIRED
DWG	DRAWING	REV	REVISION
EA	EACH	RL	REFRIGERANT LIQUID
EAT	ENTERING AIR TEMPERATURE	RM	ROOM
EDR	EQUIVALENT DIRECT RADIATION	RS	REFRIGERANT SUCTION
		RTN	RETURN
EER	ENERGY EFFICIENCY RATIO	S	SWITCH
		SCH	SCHEDULE
EFF	EFFICIENCY	SD	SMOKE DAMPER WITH ACCESS DOOR
EJ	EXPANSION JOINT		
EL	ELEVATION	SEC	SECONDARY,SECONDS
ELB	ELBOW	SENS	SENSIBLE
ELEC	ELECTRICAL	SEP	SEPARATE
ENT	ENTERING	SEQ	SEQUENCE
ESP	EXTERNAL STATIC PRESSURE	SER	SERIES
EVAP	EVAPORATOR	SERV	SERVICE
EWT	ENTERING WATER TEMPERATURE	SHT	SHEET
EXH	EXHAUST	SOL	SOLENOID
EXP	EXPANSION	SP	STATIC PRESSURE
EXST	EXISTING	SS	STAINLESS STEEL
EXT	EXTERNAL	STL	STEEL
F&T	FLOAT & THERMOSTATIC	SUCT	SUCTION
FC	FLEXIBLE CONNECTOR / FLEXIBLE CONNECTION	SPLY	SUPPLY
		TD	TEMPERATURE DIFFERENTIAL
FDW	FEED WATER		
FLA	FULL LOAD AMPS	TEMP	TEMPERATURE
FLR	FLOOR	TH	THERMOMETER
FO	FUEL OIL	THK	THICK
FPM	FOOT (FEET) PER MINUTE	TSP	TOTAL STATIC PRESSURE
FPS	FOOT (FEET) PER SECOND	TYP.	TYPICAL
FS	FLOW SWITCH	UON	UNLESS OTHERWISE NOTED
FT	FOOT (FEET)	V	VENT OR VOLT
GA	GAUGE	VAC	VACUUM
GAL	GALLONS	VAV	VARIABLE AIR VOLUME
GALV	GALVANIZED	VB	VACUUM BREAKER
GND	GROUND	VEL	VELOCITY
GPH	GALLONS PER HOUR	VERT	VERTICAL
GPM	GALLONS PER MINUTE	VIB	VIBRATION
GPS	GALLONS PER SECOND	VOL	VOLUME
GR	GRAIN	VSD	VARIABLE SPEED DRIVE
HD	HEAD	VTR	VENT THRU ROOF
HG	HOT GAS	W	WATT, WIDTH OR WIDE
HGT	HEIGHT	WB	WET BULB
HTD	HEATED	WMS	WIRE MESH SCREEN
HTR	HEATER		
HMD	HUMIDITY		
HORIZ	HORIZONTAL		
HP	HORSEPOWER		
Hz	HERTZ		

NOTE:
NOT ALL ABBREVIATIONS AND SYMBOLS INDICATED MAY APPEAR ON THESE CONTRACT DRAWINGS. THIS IS FOR REFERENCE ONLY.

MECHANICAL DRAWING LIST

M0.0	MECHANICAL INFORMATION SHEET
M1.0	FIRST FLOOR PLAN - UNIT A - MECHANICAL DUCTWORK
M1.1	FIRST FLOOR PLAN - UNIT B - MECHANICAL DUCTWORK
M1.2	FIRST FLOOR PLAN - UNIT C - MECHANICAL DUCTWORK
M2.0	FIRST FLOOR PLAN - UNIT A - MECHANICAL PIPING
M2.1	FIRST FLOOR PLAN - UNIT B - MECHANICAL PIPING
M2.2	FIRST FLOOR PLAN - UNIT C - MECHANICAL PIPING
M3.0	ROOF PLAN - MECHANICAL
M4.0	MECHANICAL DETAILS
M5.0	MECHANICAL SCHEDULES

DUCTWORK SYMBOLS

DUCTWORK	DESCRIPTION
	EXISTING TO REMAIN
	EXISTING TO BE REMOVED
	NEW WORK
	SUPPLY AIR UP
	SUPPLY AIR DOWN
	EXHAUST OR RETURN AIR UP
	EXHAUST OR RETURN AIR DOWN
	ROUND DUCT UP
	ROUND DUCT DOWN
24x36	RECTANGULAR DUCT SIZE SHOWN IN INCHES (FIRST FIGURE-SIDE SHOWN)
36x14∅*	FLAT OVAL DUCT SIZE (FIRST FIGURE-SIDE SHOWN)
	DIRECTION OF FLOW
UP DN	DUCT INCLINED RISE OR DROP IN DIRECTION OF FLOW
	90° ELBOW WITH TURNING VANES
	45°ELBOW (NO VANES)
	SUPPLY OR RETURN BRANCH CONNECTION
	SUPPLY BRANCH WITH SPIN COLLAR CONNECTION
	LATERAL CONNECTION ROUND DUCTWORK
	CONICAL TEE ROUND DUCTWORK
	DUCT WITH INTERNAL LINING
(CFM)	4-WAY DIFFUSER (D)
(CFM)	3-WAY, 2-WAY, OR 1-WAY GRILLE (G)
(CFM)	EXHAUST OR RETURN GRILLE (G)
MD	MOTORIZED DAMPER
	VOLUME DAMPER
BD	BYPASS DAMPER
BDD	BACK DRAFT DAMPER
	SMOKE DAMPER WITH ACCESS DOOR
	FIRE DAMPER WITH ACCESS DOOR
	COMBINATION FIRE & SMOKE DAMPER WITH ACCESS DOOR
SP	STATIC PRESSURE SENSOR
T	DUCT TEMPERATURE SENSOR
H	DUCT HUMIDITY SENSOR
SDT	DUCT SMOKE DETECTOR
	FLEXIBLE DUCTWORK DUCT PRESSURE CLASS

PIPING SYMBOLS

SYMBOL	DESCRIPTION
	SHUT-OFF VALVE
	GLOBE VALVE
	CHECK VALVE
	FLOW SETTER
	ANGLE GATE VALVE
	RELIEF OR SAFETY VALVE
	SOLENOID VALVE
T	THERMAL EXPANSION VALVE
	BACK PRESSURE VALVE
	BUTTERFLY VALVE
	2-WAY CONTROL VALVE
	3-WAY CONTROL VALVE
	PRESSURE REDUCING VALVE
	UNION
	STRAINER W/BLOW-OFF & CAP
	FLOW SENSOR
	SIGHT GLASS
	PIPE GUIDE
	PIPE ANCHOR
	FLEXIBLE CONNECTOR
	EXPANSION JOINT
	THERMOMETER
A	PRESSURE GAUGE W/COCK
M	AUTOMATIC AIR VENT
	MANUAL AIR VENT
	ORIFICE PLATE
	FLOAT AND THERMOSTATIC TRAP
	DIRECTION OF FLOW
	DIRECTION OF SLOPE
	CONCENTRIC REDUCER
	ECCENTRIC REDUCER
	PIPE UP
	PIPE DOWN
	PIPE THROUGH
	TOP TAKE-OFF
	BUCKET TRAP
EMD	END OF MAIN DRIP
	EXISTING TO REMAIN
	EXISTING TO BE REMOVED
	NEW WORK
BBD	BOILER BLOWDOWN - CONTINUOUS
BF	BOILER FEED WATER
CA	COMPRESSED AIR
CF	CHEMICAL FEED
CHS	CHILLED WATER SUPPLY
CHR	CHILLED WATER RETURN
CR	CONDENSER WATER RETURN
CS	CONDENSER WATER SUPPLY
D	CONDENSATE DRAIN OR DRAIN
FOR	FUEL OIL RETURN
FOS	FUEL OIL SUPPLY
FOV	FUEL OIL TANK VENT
HG	HOT GAS
HPR	HIGH PRESSURE CONDENSATE RETURN
HPS	HIGH PRESSURE STEAM SUPPLY
HR	HEATING RETURN
HS	HEATING SUPPLY
LPCS	LOW PRESSURE CLEAN STEAM
LPR	LOW PRESSURE CONDENSATE RETURN
LPS	LOW PRESSURE STEAM SUPPLY
MPR	MEDIUM PRESSURE CONDENSATE RETURN
MPS	MEDIUM PRESSURE STEAM SUPPLY
MU	MAKE UP WATER
PCR	PUMPED CONDENSATE RETURN
RL	REFRIGERANT LIQUID
RS	REFRIGERANT SUCTION
V	VENT LINE

Professional Certification. I hereby certify that these documents were prepared or approved by me, and that I am a duly licensed professional engineer under the laws of the State of Maryland. License No. 49693, Expiration Date: 2020-07-24.

STATE OF MARYLAND — KATHRYN PARFITT — 49693 — PROFESSIONAL ENGINEER

ALL REPORTS, PLANS SPECIFICATIONS AND COMPUTER FILES RELATING TO THIS PROJECT ARE THE PROPERTY OF CRABTREE, ROHRBAUGH & ASSOCIATES. CRABTREE ROHRBAUGH & ASSOCIATES RETAINS ALL COMMON LAW, STATUTE AND OTHER RESERVED RIGHTS INCLUDING THE COPYRIGHT THERETO. REPRODUCTION OF THE MATERIAL HERIN OR SUBSTANTIAL USE WITHOUT WRITTEN PERMISSION OF CRABTREE, ROHRBAUGH & ASSOCIATES VIOLATES THE COPYRIGHT LAWS OF THE UNITED STATES AND WILL BE SUBJECT TO LEGAL PROSECUTION.
© CRABTREE, ROHRBAUGH & ASSOCIATES, INC 2019

REVISIONS

#	MM-DD-YR	NAME	DESCRIPTION OF CHANGES

CRABTREE ROHRBAUGH & ASSOCIATES - ARCHITECTS
100 WEST ROAD, SUITE 402, TOWSON MD 21204 410-528-0272
www.cra-architects.com
MECHANICSBURG, PENNSYLVANIA CHARLOTTESVILLE, VIRGINIA WHITE SULPHUR SPRINGS, WEST VIRGINIA

PROPOSED NEW
WASHINGTON COUNTY PUBLIC SAFETY TRAINING CENTER
WASHINGTON COUNTY PROJECT NO. 28-266
18350 PUBLIC SAFETY PLACE
HAGERSTOWN, MD 21740

MECHANICAL INFORMATION SHEET

PLOT SCALE: 12" = 1'-0"

FILENAME:

DATE: December 18, 2019

PROJECT 3089

M0.0

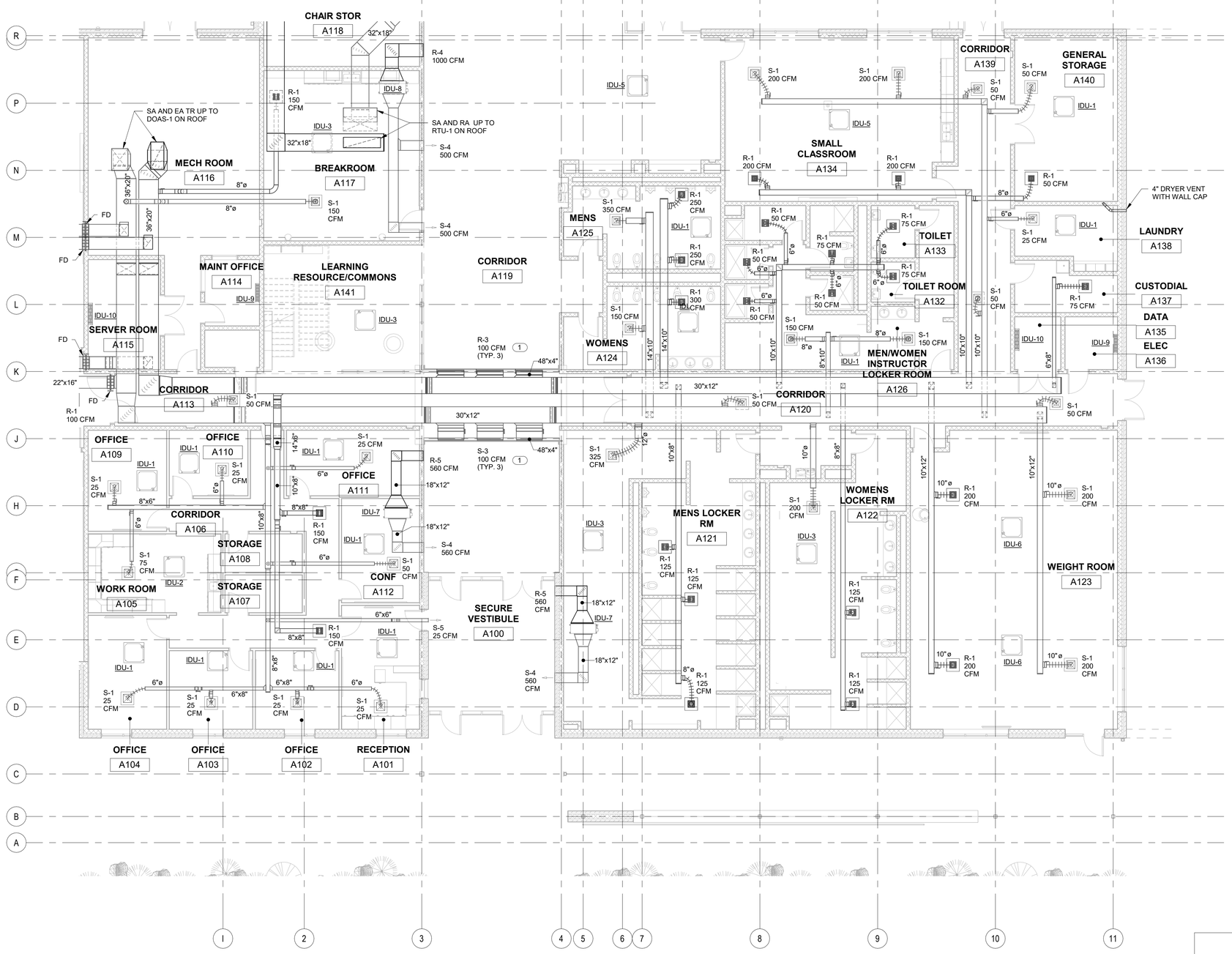

1 FIRST FLOOR PLAN - UNIT A - MECHANICAL DUCTWORK

SCALE: 1/8" = 1'-0"

NOTES BY SYMBOL: (#)

(THIS SHEET ONLY)

1. PROVIDE CONTINUOUS SLOT DIFFUSER/RETURN FULL LENGTH OF BRIDGE. MOUNT DUCT AND DIFFUSER/RETURN AS HIGH AS POSSIBLE; COORDINATE WITH GC/ARCHITECT.

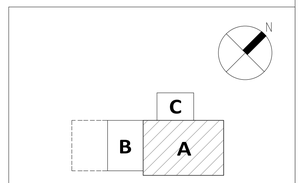

KEY PLAN

Professional Certification. I hereby certify that these documents were prepared or approved by me, and that I am a duly licensed professional engineer under the laws of the State of Maryland. License No. 49693, Expiration Date: 2020-07-24.

STATE OF MARYLAND
KATHRYN PARFITT
49693
PROFESSIONAL ENGINEER

ALL REPORTS, PLANS SPECIFICATIONS AND COMPUTER FILES RELATING TO THIS PROJECT ARE THE PROPERTY OF CRABTREE, ROHRBAUGH & ASSOCIATES. CRABTREE ROHRBAUGH & ASSOCIATES RETAINS ALL COMMON LAW, STATUTE AND OTHER RESERVED RIGHTS INCLUDING THE COPYRIGHT THERETO. REPRODUCTION OF THE MATERIAL HERIN OR SUBSTANTIAL USE WITHOUT WRITTEN PERMISSION OF CRABTREE, ROHRBAUGH & ASSOCIATES VIOLATES THE COPYRIGHT LAWS OF THE UNITED STATES AND WILL BE SUBJECT TO LEGAL PROSECUTION.
© CRABTREE, ROHRBAUGH & ASSOCIATES, INC 2019

REVISIONS

#	MM-DD-YR	NAME	DESCRIPTION OF CHANGES

CRABTREE ROHRBAUGH & ASSOCIATES - ARCHITECTS
100 WEST ROAD, SUITE 402, TOWSON MD 21204 410-528-0272
www.cra-architects.com
MECHANICSBURG, PENNSYLVANIA CHARLOTTESVILLE, VIRGINIA WHITE SULPHUR SPRINGS, WEST VIRGINIA

PROPOSED NEW
WASHINGTON COUNTY PUBLIC SAFETY TRAINING CENTER
WASHINGTON COUNTY PROJECT NO. 28-266
18350 PUBLIC SAFETY PLACE
HAGERSTOWN, MD 21740

FIRST FLOOR PLAN - UNIT A - MECHANICAL DUCTWORK

PLOT SCALE: 1/8" = 1'-0"

FILENAME:

DATE: December 18, 2019

PROJECT
3089

M1.0

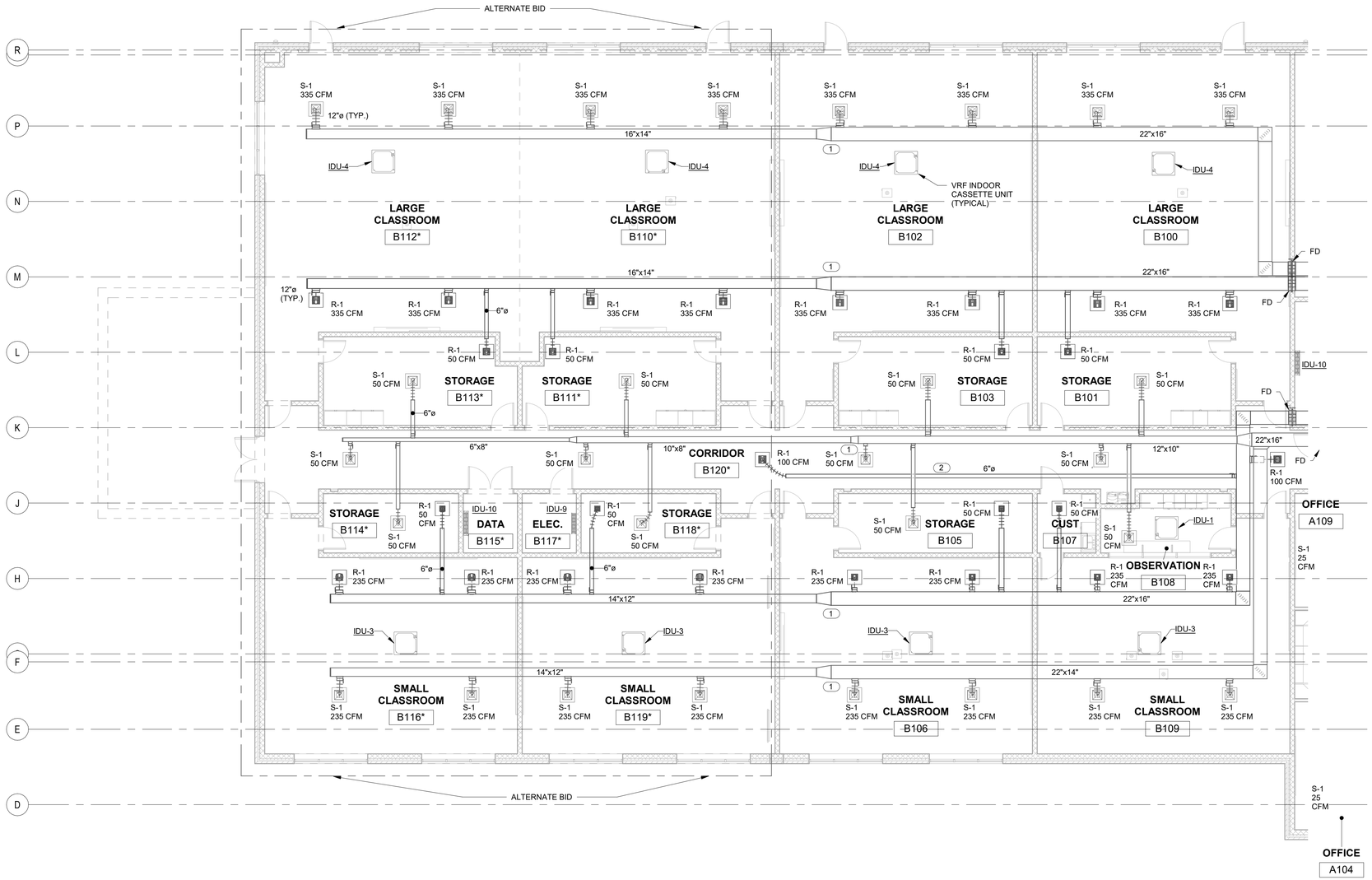

1 FIRST FLOOR PLAN - UNIT B - MECHANICAL DUCTWORK

SCALE: 1/8" = 1'-0"

NOTES BY SYMBOL: (#)
(THIS SHEET ONLY)

1. PROVIDE DUCT END CAP AFTER LAST AIR DEVICE/BEFORE TRANSITION AS PART OF BASE BID; TRANSITION/DUCT CONTINUATION IS PART OF ALTERNATE BID.
2. RETURN DUCT TO MAIN IS PART OF ALTERNATE BID.

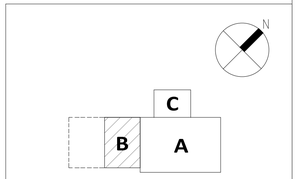

KEY PLAN

Professional Certification. I hereby certify that these documents were prepared or approved by me, and that I am a duly licensed professional engineer under the laws of the State of Maryland. License No. 49693, Expiration Date: 2020-07-24.

STATE OF MARYLAND
KATHRYN PARFITT
49693
PROFESSIONAL ENGINEER

est. 1776

ALL REPORTS, PLANS SPECIFICATIONS AND COMPUTER FILES RELATING TO THIS PROJECT ARE THE PROPERTY OF CRABTREE, ROHRBAUGH & ASSOCIATES. CRABTREE ROHRBAUGH & ASSOCIATES RETAINS ALL COMMON LAW, STATUTE AND OTHER RESERVED RIGHTS INCLUDING THE COPYRIGHT THERETO. REPRODUCTION OF THE MATERIAL HERIN OR SUBSTANTIAL USE WITHOUT WRITTEN PERMISSION OF CRABTREE, ROHRBAUGH & ASSOCIATES VIOLATES THE COPYRIGHT LAWS OF THE UNITED STATES AND WILL BE SUBJECT TO LEGAL PROSECUTION.
© CRABTREE, ROHRBAUGH & ASSOCIATES, INC 2019

REVISIONS

#	MM-DD-YR	NAME	DESCRIPTION OF CHANGES

CRABTREE ROHRBAUGH & ASSOCIATES - ARCHITECTS
100 WEST ROAD, SUITE 402, TOWSON MD 21204 410-528-0272
www.cra-architects.com
MECHANICSBURG, PENNSYLVANIA CHARLOTTESVILLE, VIRGINIA WHITE SULPHUR SPRINGS, WEST VIRGINIA

PROPOSED NEW
WASHINGTON COUNTY PUBLIC SAFETY TRAINING CENTER
WASHINGTON COUNTY PROJECT NO. 28-266
18350 PUBLIC SAFETY PLACE
HAGERSTOWN, MD 21740

CR

FIRST FLOOR PLAN - UNIT B - MECHANICAL DUCTWORK

PLOT SCALE: 1/8" = 1'-0"

FILENAME:

DATE: December 18, 2019

PROJECT
3089

M1.1

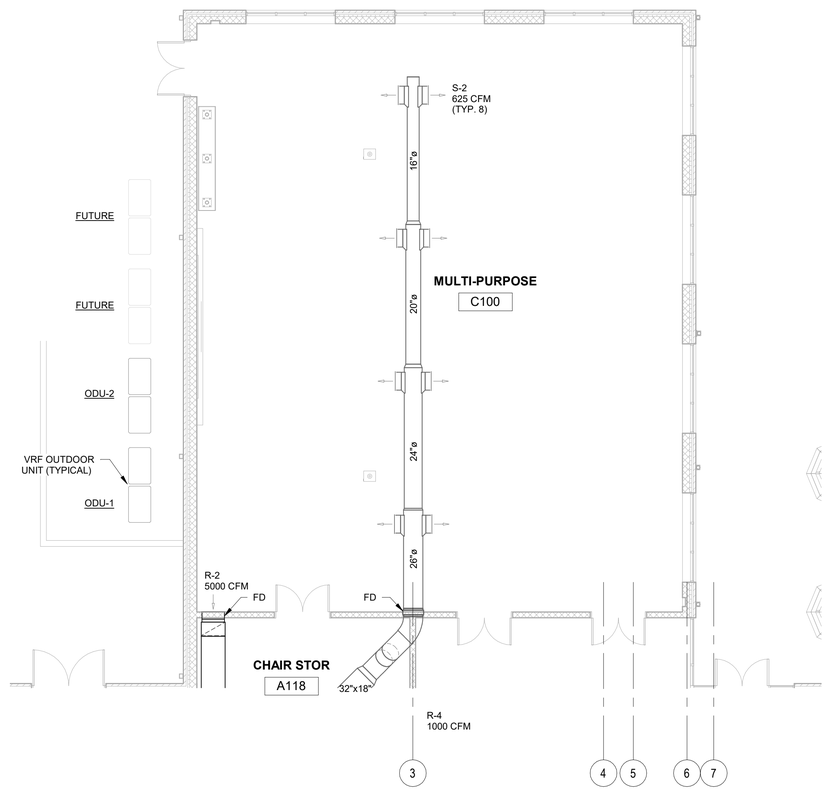

1 FIRST FLOOR PLAN - UNIT C - MECHANICAL DUCTWORK
SCALE: 1/8" = 1'-0"

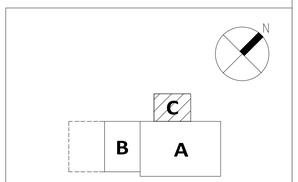

KEY PLAN

Professional Certification. I hereby certify that these documents were prepared or approved by me, and that I am a duly licensed professional engineer under the laws of the State of Maryland. License No. 49693, Expiration Date: 2020-07-24.

STATE OF MARYLAND
KATHRYN PARETTI
49693
PROFESSIONAL ENGINEER

ALL REPORTS, PLANS SPECIFICATIONS AND COMPUTER FILES RELATING TO THIS PROJECT ARE THE PROPERTY OF CRABTREE, ROHRBAUGH & ASSOCIATES. CRABTREE ROHRBAUGH & ASSOCIATES RETAINS ALL COMMON LAW, STATUTE AND OTHER RESERVED RIGHTS INCLUDING THE COPYRIGHT THERETO. REPRODUCTION OF THE MATERIAL HERIN OR SUBSTANTIAL USE WITHOUT WRITTEN PERMISSION OF CRABTREE, ROHRBAUGH & ASSOCIATES VIOLATES THE COPYRIGHT LAWS OF THE UNITED STATES AND WILL BE SUBJECT TO LEGAL PROSECUTION.
© CRABTREE, ROHRBAUGH & ASSOCIATES, INC 2019

REVISIONS

#	MM-DD-YR	NAME	DESCRIPTION OF CHANGES

CRABTREE ROHRBAUGH & ASSOCIATES - ARCHITECTS
100 WEST ROAD, SUITE 402, TOWSON MD 21204 410-528-0272
www.cra-architects.com
MECHANICSBURG, PENNSYLVANIA CHARLOTTESVILLE, VIRGINIA WHITE SULPHUR SPRINGS, WEST VIRGINIA

PROPOSED NEW
WASHINGTON COUNTY PUBLIC SAFETY TRAINING CENTER
WASHINGTON COUNTY PROJECT NO. 28-266
18350 PUBLIC SAFETY PLACE
HAGERSTOWN, MD 21740

CR

FIRST FLOOR PLAN - UNIT C - MECHANICAL DUCTWORK

PLOT SCALE: 1/8" = 1'-0"
FILENAME:
DATE: December 18, 2019

PROJECT
3089

M1.2

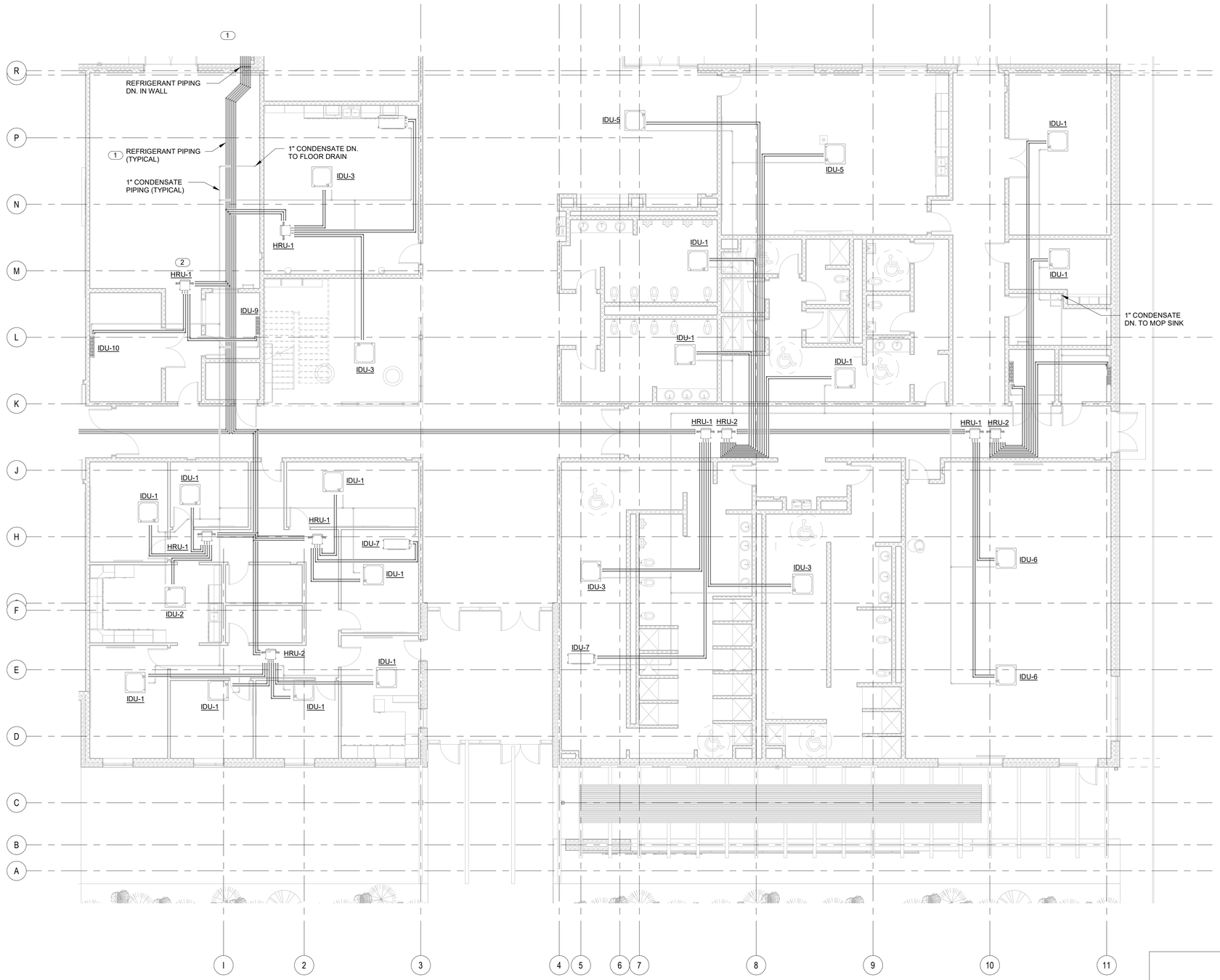

FIRST FLOOR PLAN - UNIT A - MECHANICAL PIPING

SCALE: 1/8" = 1'-0"

NOTES BY SYMBOL: (#)
(THIS SHEET ONLY)

1. PROVIDE REFRIGERANT PIPING SIZED PER VRF MANUFACTURER (TYPICAL)
2. PROVIDE SHUTOFF VALVES ON ALL HRU PORTS (TYPICAL)

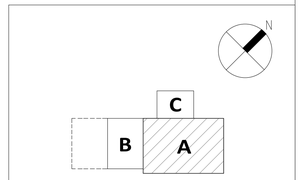

KEY PLAN

Professional Certification. I hereby certify that these documents were prepared or approved by me, and that I am a duly licensed professional engineer under the laws of the State of Maryland. License No. 49693, Expiration Date: 2020-07-24.

STATE OF MARYLAND
KATHRYN PARFITT
49693
PROFESSIONAL ENGINEER

ALL REPORTS, PLANS SPECIFICATIONS AND COMPUTER FILES RELATING TO THIS PROJECT ARE THE PROPERTY OF CRABTREE, ROHRBAUGH & ASSOCIATES. CRABTREE ROHRBAUGH & ASSOCIATES RETAINS ALL COMMON LAW, STATUTE AND OTHER RESERVED RIGHTS INCLUDING THE COPYRIGHT THERETO. REPRODUCTION OF THE MATERIAL HERIN OR SUBSTANTIAL USE WITHOUT WRITTEN PERMISSION OF CRABTREE, ROHRBAUGH & ASSOCIATES VIOLATES THE COPYRIGHT LAWS OF THE UNITED STATES AND WILL BE SUBJECT TO LEGAL PROSECUTION.
© CRABTREE, ROHRBAUGH & ASSOCIATES, INC 2019

REVISIONS

#	MM-DD-YR	NAME	DESCRIPTION OF CHANGES

CRABTREE ROHRBAUGH & ASSOCIATES - ARCHITECTS
100 WEST ROAD, SUITE 402, TOWSON MD 21204 410-528-0272
www.cra-architects.com
MECHANICSBURG, PENNSYLVANIA CHARLOTTESVILLE, VIRGINIA WHITE SULPHUR SPRINGS, WEST VIRGINIA

PROPOSED NEW
WASHINGTON COUNTY PUBLIC SAFETY TRAINING CENTER
WASHINGTON COUNTY PROJECT NO. 28-266
18350 PUBLIC SAFETY PLACE
HAGERSTOWN, MD 21740

FIRST FLOOR PLAN - UNIT A - MECHANICAL PIPING

PLOT SCALE: 1/8" = 1'-0"
FILENAME:
DATE: December 18, 2019

PROJECT
3089

M2.0

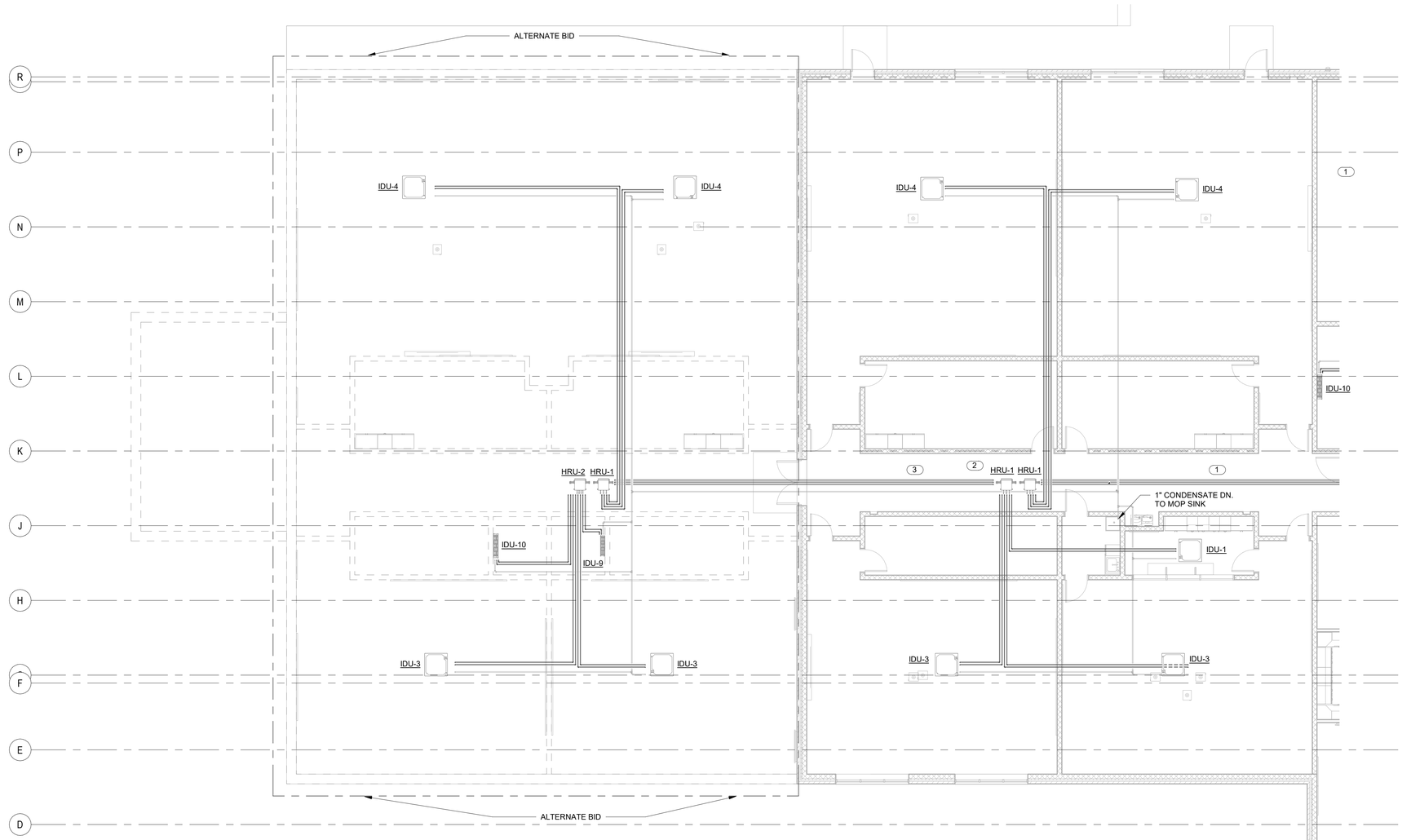

FIRST FLOOR PLAN - UNIT B - MECHANICAL PIPING

SCALE: 1/8" = 1'-0"

NOTES BY SYMBOL: (#)
(THIS SHEET ONLY)

1. PROVIDE REFRIGERANT PIPING SIZED PER VRF MANUFACTURER (TYPICAL)
2. PROVIDE SHUTOFF VALVES ON ALL HRU PORTS (TYPICAL)
3. REFRIGERANT PIPING TO END CLASSROOMS IS PART OF ALTERNATE BID; CAP FEED-THRU PORTS ON LAST HRU AS PART OF BASE BID.

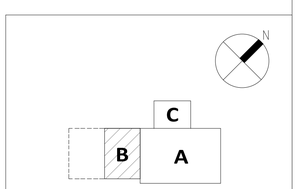

KEY PLAN

Professional Certification. I hereby certify that these documents were prepared or approved by me, and that I am a duly licensed professional engineer under the laws of the State of Maryland. License No. 49693, Expiration Date: 2020-07-24.

STATE OF MARYLAND
KATHRYN PARETTI
49693
PROFESSIONAL ENGINEER

ALL REPORTS, PLANS SPECIFICATIONS AND COMPUTER FILES RELATING TO THIS PROJECT ARE THE PROPERTY OF CRABTREE, ROHRBAUGH & ASSOCIATES. CRABTREE ROHRBAUGH & ASSOCIATES RETAINS ALL COMMON LAW, STATUTE AND OTHER RESERVED RIGHTS INCLUDING THE COPYRIGHT THERETO. REPRODUCTION OF THE MATERIAL HERIN OR SUBSTANTIAL USE WITHOUT WRITTEN PERMISSION OF CRABTREE, ROHRBAUGH & ASSOCIATES VIOLATES THE COPYRIGHT LAWS OF THE UNITED STATES AND WILL BE SUBJECT TO LEGAL PROSECUTION.
© CRABTREE, ROHRBAUGH & ASSOCIATES, INC 2019

REVISIONS

#	MM-DD-YR	NAME	DESCRIPTION OF CHANGES

CRABTREE ROHRBAUGH & ASSOCIATES - ARCHITECTS
100 WEST ROAD, SUITE 402, TOWSON MD 21204 410-528-0272
www.cra-architects.com
MECHANICSBURG, PENNSYLVANIA CHARLOTTESVILLE, VIRGINIA WHITE SULPHUR SPRINGS, WEST VIRGINIA

PROPOSED NEW
WASHINGTON COUNTY PUBLIC SAFETY TRAINING CENTER
WASHINGTON COUNTY PROJECT NO. 28-266
18350 PUBLIC SAFETY PLACE
HAGERSTOWN, MD 21740

FIRST FLOOR PLAN - UNIT B - MECHANICAL PIPING

PLOT SCALE: 1/8" = 1'-0"

FILENAME:

DATE: December 18, 2019

PROJECT
3089

M2.1

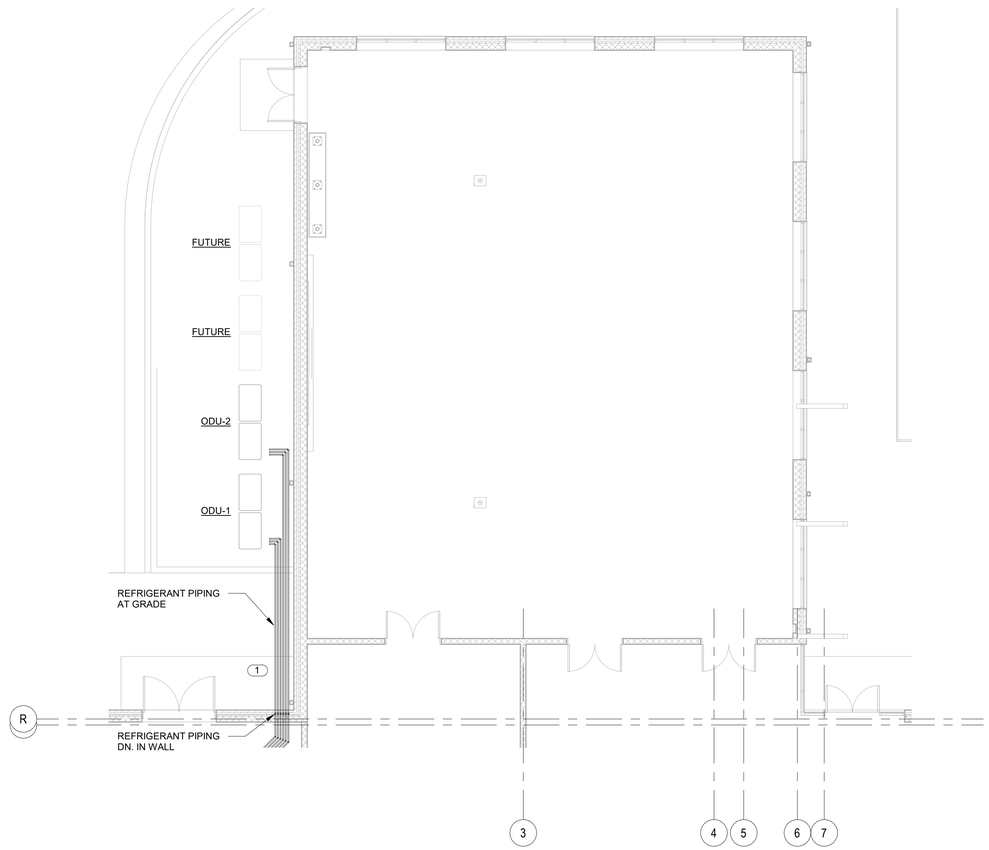

1 FIRST FLOOR PLAN - UNIT C - MECHANICAL PIPING
SCALE: 1/8" = 1'-0"

NOTES BY SYMBOL: (#)
(THIS SHEET ONLY)

1. PROVIDE REFRIGERANT PIPING SIZED PER VRF MANUFACTURER (TYPICAL)

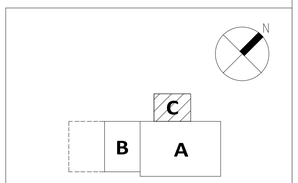

KEY PLAN

Professional Certification. I hereby certify that these documents were prepared or approved by me, and that I am a duly licensed professional engineer under the laws of the State of Maryland. License No. 49693, Expiration Date: 2020-07-24.

STATE OF MARYLAND
KATHRYN PARETTI
49693
PROFESSIONAL ENGINEER

ALL REPORTS, PLANS SPECIFICATIONS AND COMPUTER FILES RELATING TO THIS PROJECT ARE THE PROPERTY OF CRABTREE, ROHRBAUGH & ASSOCIATES. CRABTREE ROHRBAUGH & ASSOCIATES RETAINS ALL COMMON LAW, STATUTE AND OTHER RESERVED RIGHTS INCLUDING THE COPYRIGHT THERETO. REPRODUCTION OF THE MATERIAL HERIN OR SUBSTANTIAL USE WITHOUT WRITTEN PERMISSION OF CRABTREE, ROHRBAUGH & ASSOCIATES VIOLATES THE COPYRIGHT LAWS OF THE UNITED STATES AND WILL BE SUBJECT TO LEGAL PROSECUTION.
© CRABTREE, ROHRBAUGH & ASSOCIATES, INC 2019

REVISIONS

#	MM-DD-YR	NAME	DESCRIPTION OF CHANGES

CRABTREE ROHRBAUGH & ASSOCIATES - ARCHITECTS
100 WEST ROAD, SUITE 402, TOWSON MD 21204 410-528-0272
MECHANICSBURG, PENNSYLVANIA CHARLOTTESVILLE, VIRGINIA WHITE SULPHUR SPRINGS, WEST VIRGINIA
www.cra-architects.com

PROPOSED NEW
WASHINGTON COUNTY PUBLIC SAFETY TRAINING CENTER
WASHINGTON COUNTY PROJECT NO. 28-266
18350 PUBLIC SAFETY PLACE
HAGERSTOWN, MD 21740

CR

FIRST FLOOR PLAN - UNIT C - MECHANICAL PIPING

PLOT SCALE: 1/8" = 1'-0"
FILENAME:
DATE: December 18, 2019

PROJECT
3089

M2.2

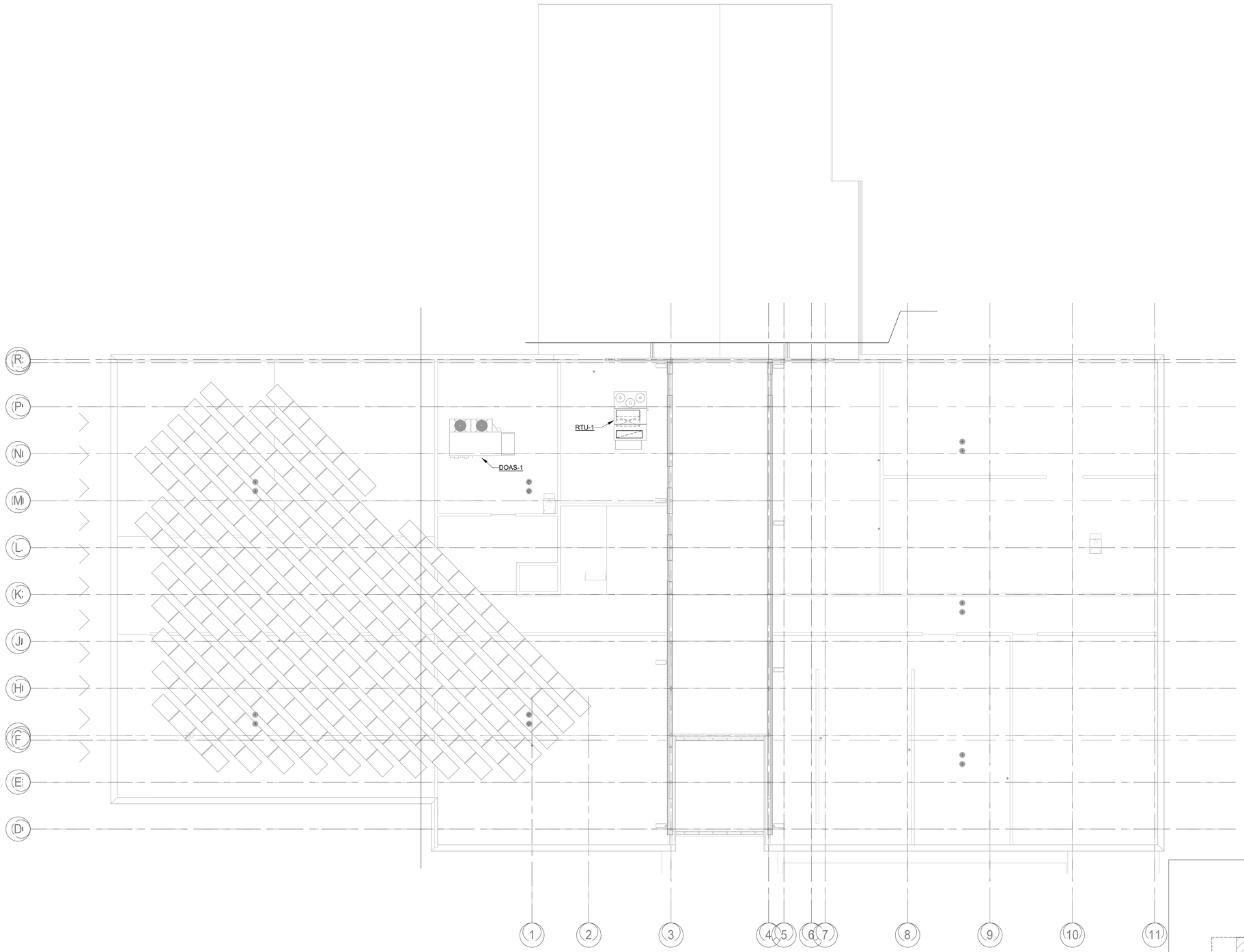

1 ROOF PLAN - MECHANICAL
SCALE: 3/32" = 1'-0"

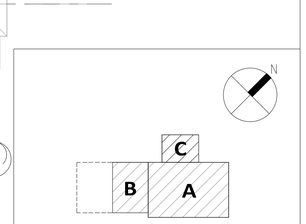

KEY PLAN

Professional Certification. I hereby certify that these documents were prepared or approved by me, and that I am a duly licensed professional engineer under the laws of the State of Maryland. License No. 49693, Expiration Date: 2020-07-24.

STATE OF MARYLAND
KATHRYN PARFITT
49693
PROFESSIONAL ENGINEER

ALL REPORTS, PLANS SPECIFICATIONS AND COMPUTER FILES RELATING TO THIS PROJECT ARE THE PROPERTY OF CRABTREE, ROHRBAUGH & ASSOCIATES. CRABTREE ROHRBAUGH & ASSOCIATES RETAINS ALL COMMON LAW, STATUTE AND OTHER RESERVED RIGHTS INCLUDING THE COPYRIGHT THERETO. REPRODUCTION OF THE MATERIAL HERIN OR SUBSTANTIAL USE WITHOUT WRITTEN PERMISSION OF CRABTREE, ROHRBAUGH & ASSOCIATES VIOLATES THE COPYRIGHT LAWS OF THE UNITED STATES AND WILL BE SUBJECT TO LEGAL PROSECUTION.
© CRABTREE, ROHRBAUGH & ASSOCIATES, INC 2019

REVISIONS

#	MM-DD-YR	NAME	DESCRIPTION OF CHANGES

CRABTREE ROHRBAUGH & ASSOCIATES - ARCHITECTS
100 WEST ROAD, SUITE 402, TOWSON MD 21204 410-528-0272
www.cra-architects.com
MECHANICSBURG, PENNSYLVANIA CHARLOTTESVILLE, VIRGINIA WHITE SULPHUR SPRINGS, WEST VIRGINIA

PROPOSED NEW
WASHINGTON COUNTY PUBLIC SAFETY TRAINING CENTER
WASHINGTON COUNTY PROJECT NO. 28-266
18350 PUBLIC SAFETY PLACE
HAGERSTOWN, MD 21740

CR

ROOF PLAN - MECHANICAL

PLOT SCALE: 3/32" = 1'-0"
FILENAME:
DATE: December 18, 2019

PROJECT
3089

M3.0

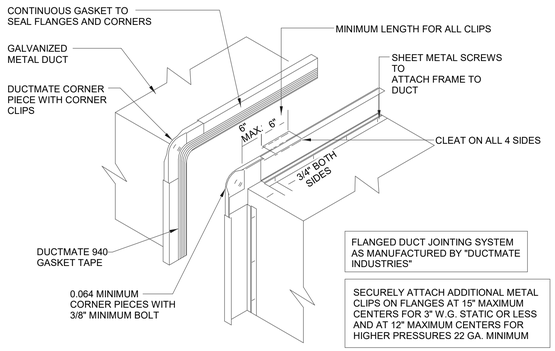

FLANGED DUCT DETAIL

NO SCALE

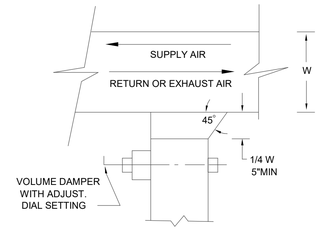

NOTE: PROVIDE VOLUME DAMPER AT EACH LOW PRESSURE SUPPLY, EXHAUST AND RETURN BRANCH DUCT.

DUCT BRANCH TAKEOFF FOR LOW PRESSURE DUCTWORK

NO SCALE

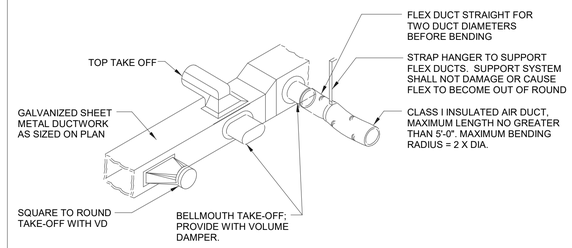

BRANCH DUCT AND TAKE-OFF DETAIL

NO SCALE

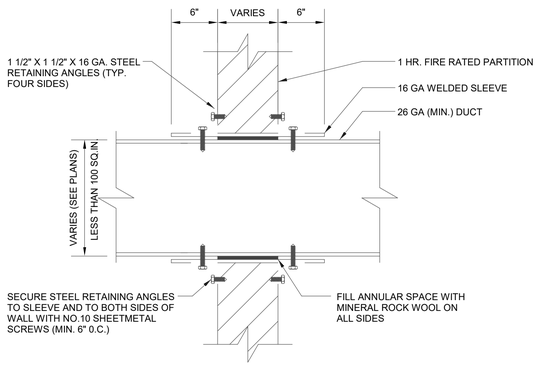

DUCT PENETRATION DETAIL

NO SCALE

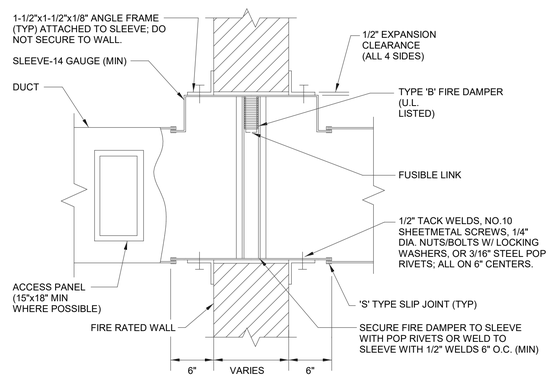

VERTICAL FIRE DAMPER DETAIL

NO SCALE

Professional Certification. I hereby certify that these documents were prepared or approved by me, and that I am a duly licensed professional engineer under the laws of the State of Maryland. License No. 49693, Expiration Date: 2020-07-24.

STATE OF MARYLAND
KATHRYN PARFITT
49693
PROFESSIONAL ENGINEER

est. 1776

ALL REPORTS, PLANS SPECIFICATIONS AND COMPUTER FILES RELATING TO THIS PROJECT ARE THE PROPERTY OF CRABTREE, ROHRBAUGH & ASSOCIATES. CRABTREE ROHRBAUGH & ASSOCIATES RETAINS ALL COMMON LAW, STATUTE AND OTHER RESERVED RIGHTS INCLUDING THE COPYRIGHT THERETO. REPRODUCTION OF THE MATERIAL HERIN OR SUBSTANTIAL USE WITHOUT WRITTEN PERMISSION OF CRABTREE, ROHRBAUGH & ASSOCIATES VIOLATES THE COPYRIGHT LAWS OF THE UNITED STATES AND WILL BE SUBJECT TO LEGAL PROSECUTION.
© CRABTREE, ROHRBAUGH & ASSOCIATES, INC 2019

REVISIONS

#	MM-DD-YR	NAME	DESCRIPTION OF CHANGES

CRABTREE ROHRBAUGH & ASSOCIATES - ARCHITECTS
100 WEST ROAD, SUITE 402, TOWSON MD 21204 410-528-0272
www.cra-architects.com
MECHANICSBURG, PENNSYLVANIA CHARLOTTESVILLE, VIRGINIA WHITE SULPHUR SPRINGS, WEST VIRGINIA

PROPOSED NEW
WASHINGTON COUNTY PUBLIC SAFETY TRAINING CENTER
WASHINGTON COUNTY PROJECT NO. 28-266
18350 PUBLIC SAFETY PLACE
HAGERSTOWN, MD 21740

MECHANICAL DETAILS

PLOT SCALE: AS INDICATED

FILENAME:

DATE: December 18, 2019

PROJECT
3089

M4.0

DOAS UNIT SCHEDULE

TAG	BASIS OF DESIGN		SUPPLY FAN			RETURN/EXHAUST FAN			COOLING COIL DATA				HEATING COIL DATA				TOTAL ENTHALPY WHEEL				ELECTRICAL			OPER. WEIGHT LBS.	REMARKS
	MANUFACTURER	MODEL NO.	CFM	ESP	HP	CFM	ESP	HP	TOTAL MBH	SENS MBH	EAT (°F DB / WB)	LAT (°F DB / WB)	INPUT MBH	OUTPUT MBH	EAT (°F)	LAT (°F)	SA SUMMER EAT-LAT	EA SUMMER EAT-LAT	SA WINTER EAT-LAT	EA WINTER EAT-LAT	V/PH/HZ	MCA	MOCP		
DOAS-1	CARRIER	62XM20	7200	1.4	10	7200	1.3	7.5	278.2	199.8	82.8 / 68.5	57.0 / 56.1	250	200	41.3	67.7	94|75 - 82.8|68.5	75|62 - 85.8|69.5	8|6 - 41.3|32.2	70|50 - 32.2	480/3/60	65.3	80	4670	1,2,3,4,5

REMARKS:
1. PROVIDE SUPPLY AND RETURN SMOKE DETECTORS WITH UNIT.
2. PROVIDE WITH INTEGRAL VARIABLE FREQUENCY DRIVES FOR SUPPLY FAN AND EXHAUST FAN.
3. PROVIDE WITH 14" HIGH MANUFACTURER'S ROOF CURB.
4. PROVIDE WITH MODULATING GAS HEAT.
5. PROVIDE WITH HOT GAS REHEAT FOR HUMIDITY CONTROL.

DESIGN CONDITIONS:
SUMMER OUTDOORS: 95°F DB, 75°F WB
SUMMER INDOORS: 75°F DB, 60% RH
WINTER OUTDOORS: 0°F DB
WINTER INDOORS: 70°F DB

ROOFTOP UNIT SCHEDULE

TAG	BASIS OF DESIGN		SUPPLY FAN			MINIMUM OUTSIDE AIRFLOW (CFM)	COOLING COIL DATA				HEATING COIL DATA				ELECTRICAL			OPER. WEIGHT LBS.	REMARKS
	MANUFACTURER	MODEL NO.	CFM	ESP	HP		TOTAL MBH	SENS MBH	EAT (°F DB / WB)	LAT (°F DB / WB)	INPUT MBH	OUTPUT MBH	EAT (°F)	LAT (°F)	V/PH/HZ	MCA	MOCP		
RTU-1	CARRIER	48LCEA14	5000	1.0	3	1750	147	113	80 / 67	57 / 56	220	178	46	79	480/3/60	42.30000	50	2000	1,2,3,4,5,6,7

REMARKS:
1. PROVIDE SUPPLY AND RETURN SMOKE DETECTORS WITH UNIT.
2. PROVIDE WITH INTEGRAL VARIABLE FREQUENCY DRIVE FOR SUPPLY FAN.
3. PROVIDE WITH 14" HIGH MANUFACTURER'S ROOF CURB.
4. PROVIDE WITH MODULATING GAS HEAT.
5. PROVIDE WITH DUAL ENTHALPY CONTROLLED ECONOMIZER AND POWER EXHAUST FAN.
6. PROVIDE CONTROLS FOR DEMAND CONTROL VENTILATION.
7. PROVIDE WITH HOT GAS REHEAT FOR HUMIDITY CONTROL.

DESIGN CONDITIONS:
SUMMER OUTDOORS: 95°F DB, 75°F WB
SUMMER INDOORS: 75°F DB, 60% RH
WINTER OUTDOORS: 0°F DB
WINTER INDOORS: 70°F DB

VRF HEAT PUMP - INDOOR UNIT SCHEDULE

TAG NO.	BASIS OF DESIGN		NOMINAL TONS	STYLE	COOLING CAPACITY (BTU/H)	HEATING CAPACITY (BTU/H)	AIRFLOW (CFM)	STATIC PRESSURE (IN. WG.)	ELECTRICAL			REMARKS
	MANUFACTURER	MODEL							V/PH	MCA	MOCP	
IDU-1	TOSHIBA CARRIER	MMU-AP007	0.50	CEILING CASSETTE	7,500	8,500	320	--	208/1	0.5	15	--
IDU-2	TOSHIBA CARRIER	MMU-AP009	0.75	CEILING CASSETTE	9,500	10,500	330	--	208/1	0.5	15	--
IDU-3	TOSHIBA CARRIER	MMU-AP012	1.00	CEILING CASSETTE	12,000	13,500	550	--	208/1	0.8	15	--
IDU-4	TOSHIBA CARRIER	MMU-AP015	1.25	CEILING CASSETTE	15,400	17,000	550	--	208/1	0.8	15	--
IDU-5	TOSHIBA CARRIER	MMU-AP018	1.50	CEILING CASSETTE	18,000	20,000	550	--	208/1	0.8	15	--
IDU-6	TOSHIBA CARRIER	MMU-AP024	2.00	CEILING CASSETTE	24,000	27,000	550	--	208/1	1.0	15	--
IDU-7	TOSHIBA CARRIER	MMD-AP018	1.50	DUCTED CONCEALED	18,000	20,000	556	0.25	208/1	1.2	15	--
IDU-8	TOSHIBA CARRIER	MMD-AP036	3.00	DUCTED CONCEALED	36,000	40,000	1000	0.25	208/1	1.8	15	--
IDU-9	TOSHIBA CARRIER	MMK-AP007	0.50	HIGH WALL	7,500	8,500	340	--	208/1	0.3	15	--
IDU-10	TOSHIBA CARRIER	MMK-AP024	2.00	HIGH WALL	24,000	27,000	600	--	208/1	0.5	15	--

REMARKS:
1.

VRF HEAT PUMP - OUTDOOR UNIT SCHEDULE

TAG NO.	BASIS OF DESIGN		NOMINAL COOLING CAPACITY	NOMINAL HEATING CAPACITY	ELECTRICAL			EFFICIENCIES		REMARKS
	MANUFACTURER	MODEL			V/P/Hz	MCA	MOCP	EER/IEER	COP	
ODU-1	TOSHIBA CARRIER	MMY-AP216	216,000	243,000	460/3	22+17	25+20	11.80/23.50	3.57	--
ODU-2	TOSHIBA CARRIER	MMY-AP216	216,000	243,000	460/3	22+17	25+20	11.80/23.50	3.57	--

REMARKS:
1.

VRF HEAT PUMP - HEAT RECOVERY UNIT SCHEDULE

TAG NO.	BASIS OF DESIGN		MAXIMUM CONNECTED CAPACITY	AVAILABLE PORTS	ELECTRICAL			REMARKS
	MANUFACTURER	MODEL			V/P/Hz	MCA	MOCP	
HRU-1	TOSHIBA CARRIER	RBM-Y0613F4PUL	61,000	4	208/1	0.7	15	--
HRU-2	TOSHIBA CARRIER	RBM-Y0613F6PUL	61,000	6	208/1	0.7	15	--

REMARKS:
1.

GRILLE/DIFFUSER SCHEDULE

TAG	MANUFACTURER	MODEL NO.	MODULE SIZE	NECK SIZE	PATTERN	CFM RANGE	REMARKS
S1	TITUS	TDC	24"x24"	6"ϕ	4-WAY	0-100	1,2,3
	TITUS	TDC	24"x24"	8"ϕ	4-WAY	101-175	1,2,3
	TITUS	TDC	24"x24"	10"ϕ	4-WAY	176-275	1,2,3
	TITUS	TDC	24"x24"	12"ϕ	4-WAY	276-400	1,2,3
	TITUS	TDC	24"x24"	14"ϕ	4-WAY	401-550	1,2,3
S2	TITUS	300RL	-	24"x10"	DD	625	2
S3	TITUS	ML-39	CONTINUOUS	(1) 1" SLOT	-	100	2,4
S4	TITUS	300RL	-	18"x12"	DD	500-600	2
S5	TITUS	300RL	-	6"x6"	DD	0-100	2
R1 / E1	TITUS	350RL	24"x24"	6"x6"	SD	0-100	1,2,3
	TITUS	350RL	24"x24"	8"x8"	SD	101-175	1,2,3
	TITUS	350RL	24"x24"	10"x10"	SD	176-275	1,2,3
	TITUS	350RL	24"x24"	12"x12"	SD	276-400	1,2,3
	TITUS	350RL	24"x24"	14"x14"	SD	401-550	1,2,3
	TITUS	350RL	24"x24"	16"x16"	SD	551-700	1,2,3
R2	TITUS	350RL	-	30"x60"	SD	5000	2
R3	TITUS	ML-39	CONTINUOUS	(1) 1" SLOT	-	100	2,4
R4	TITUS	350RL	-	24"x18"	SD	1000	2
R5	TITUS	350RL	-	18"x12"	SD	500-600	2

REMARKS:
1. PROVIDE WITH BORDER TYPE 3, 24"x24" LAY-IN MODULE.
2. PROVIDE WITH OPPOSED BLADE DAMPER.
3. USE SIZES INDICATED IN SCHEDULE, UNLESS INDICATED OTHERWISE ON PLANS.
4. PROVIDE CONTINUOUS SLOT FULL WIDTH OF BRIDGE

Professional Certification. I hereby certify that these documents were prepared or approved by me, and that I am a duly licensed professional engineer under the laws of the State of Maryland. License No. 49693, Expiration Date: 2020-07-24.

STATE OF MARYLAND KATHRYN PARFITT 49693 PROFESSIONAL ENGINEER

ALL REPORTS, PLANS SPECIFICATIONS AND COMPUTER FILES RELATING TO THIS PROJECT ARE THE PROPERTY OF CRABTREE, ROHRBAUGH & ASSOCIATES. CRABTREE ROHRBAUGH & ASSOCIATES RETAINS ALL COMMON LAW, STATUTE AND OTHER RESERVED RIGHTS INCLUDING THE COPYRIGHT THERETO. REPRODUCTION OF THE MATERIAL HERIN OR SUBSTANTIAL USE WITHOUT WRITTEN PERMISSION OF CRABTREE, ROHRBAUGH & ASSOCIATES VIOLATES THE COPYRIGHT LAWS OF THE UNITED STATES AND WILL BE SUBJECT TO LEGAL PROSECUTION.
© CRABTREE, ROHRBAUGH & ASSOCIATES, INC 2019

REVISIONS

#	MM-DD-YR	NAME	DESCRIPTION OF CHANGES

CRABTREE ROHRBAUGH & ASSOCIATES - ARCHITECTS
100 WEST ROAD, SUITE 402, TOWSON MD 21204 410-528-0272
MECHANICSBURG, PENNSYLVANIA CHARLOTTESVILLE, VIRGINIA WHITE SULPHUR SPRINGS, WEST VIRGINIA
www.cra-architects.com

PROPOSED NEW
WASHINGTON COUNTY PUBLIC SAFETY TRAINING CENTER
WASHINGTON COUNTY PROJECT NO. 28-266
18350 PUBLIC SAFETY PLACE
HAGERSTOWN, MD 21740

MECHANICAL SCHEDULES

PLOT SCALE:

FILENAME:

DATE: December 18, 2019

PROJECT 3089

M5.0

PLUMBING GENERAL NOTES:

1. CONTRACTOR SHALL PROVIDE A COMPLETE AND WORKING SYSTEM WITH ALL NECESSARY PERMITS AND APPROVALS FROM AUTHORITIES HAVING JURISDICTION.
2. INSTALL ALL EQUIPMENT AND MATERIALS IN STRICT ACCORDANCE WITH CURRENT ADOPTED I.P.C. OR CURRENT ADOPTED N.S.P.C. ALL PERTINENT CODES, LAWS, ORDINANCES, REGULATIONS, AND RESPECTIVE MANUFACTURER'S WRITTEN INSTRUCTIONS.
3. COORDINATE PLUMBING WORK WITH THE WORK OF ALL OTHER CONTRACTORS AND OWNER.
4. PLUMBING DRAWINGS ARE DIAGRAMMATIC IN NATURE. THE DRAWINGS MUST BE FOLLOWED AS CLOSELY AS CIRCUMSTANCES PERMIT AND ACTUAL LINE LOCATIONS SHALL BE DETERMINED BY THE P.C. IN THE FIELD. HOWEVER, THE PLUMBING CONTRACTOR WILL BE HELD RESPONSIBLE FOR THE PROPER INSTALLATION OF ALL MATERIALS AND EQUIPMENT REQUIRED FOR A COMPLETE INSTALLATION WITHIN THE INTENT AND MEANING OF THE CONTRACT DOCUMENTS.
5. THE PLUMBING CONTRACTOR SHALL ARRANGE THE PROGRESS OF HIS WORK SO AS TO CONFORM TO THE PROGRESS OF THE TRADES AND SHALL COMPLETE THE ENTIRE INSTALLATION AS SOON AS THE CONDITION OF THE PROJECT WILL PERMIT.
6. ALL ITEMS OF LABOR, MATERIAL, AND EQUIPMENT NOT SPECIFICALLY DESCRIBED HEREIN NOR DETAILED ON THE DRAWINGS BUT INCIDENTAL TO OR NECESSARY FOR THE COMPLETION OF THE WORK, SHALL BE CONSIDERED AS INCLUDED WITHOUT EXTRA COST.
7. PROVIDE NECESSARY SUPPORTS, HANGERS AND HARDWARE TO PROPERLY SECURE PIPING AND EQUIPMENT TO BUILDING STRUCTURE.
8. FURNISH AND INSTALL ACCESS PANELS WHERE REQUIRED FOR ACCESS TO ALL CONCEALED VALVES, TRAPS OR EQUIPMENT WHERE NO OTHER MEANS IS PROVIDED. COORDINATE ACCESS LOCATIONS WITH ARCHITECT AND GC.
9. DO NOT INSTALL PIPING OR ANY OTHER PLUMBING EQUIPMENT OVER ELECTRICAL PANELS. MAINTAIN A MINIMUM OF 36" CLEAR IN FRONT OF ELECTRICAL PANELS.
10. CHECK AND VERIFY ALL DIMENSIONS AND EXISTING CONDITIONS AT THE SITE. FAILURE TO VISIT AND INSPECT THE EXISTING CONDITIONS SHALL NOT BE VALID REASON FOR AUTHORIZATION OF A CHANGE ORDER.
11. CONTRACTOR SHALL UNCONDITIONALLY GUARANTEE IN WRITING ALL MATERIALS, EQUIPMENT, AND WORKMANSHIP FOR A PERIOD OF ONE YEAR FROM DATE OF ACCEPTANCE BY OWNER.
12. PROVIDE SHOCK ABSORBING DEVICES WHICH WILL PROTECT WATER SUPPLY PIPING FROM WATER HAMMER. REFER TO PLUMBING EQUIPMENT SCHEDULE FOR TYPES. LOCATE AT THE ENDS OF ALL BRANCH PIPING RUNS.
13. THE PLUMBING CONTRACTOR SHALL SUBMIT TO THE ARCHITECT/ENGINEER AS-BUILT DRAWINGS AND OPERATION AND MAINTENANCE MANUALS INCLUDING ALL NAME PLATE DATA, WIRING DIAGRAMS, MAINTENANCE INSTRUCTIONS, AND PARTS LIST UPON PROJECT COMPLETION.
14. EXTERIOR BELOW GROUND PIPING SHALL BE BURIED BELOW THE LOCAL FROST LINE.
15. INTERIOR ABOVE GROUND DRAINAGE AND VENT PIPING SHALL BE CONCEALED IN WALLS AND ABOVE SUSPENDED CEILINGS WHERE POSSIBLE. VERTICAL STACKS SHALL BE PROVIDED WITH ACCESSIBLE CLEAN OUTS AT THEIR BASE.
16. THE CONTRACTOR SHALL MAINTAIN A CLEAN AND SAFE WORK AREA AT ALL TIMES. ALL SAFETY PROCEDURES AND ENFORCEMENT IS THE RESPONSIBILITY OF THE CONTRACTOR. THE CONTRACTOR SHALL CONFORM TO ALL OSHA STANDARDS.
17. BACK FLOW PREVENTERS AND/OR VACUUM BREAKERS SHALL BE INSTALLED WHERE REQUIRED TO PREVENT CONTAMINATION OF POTABLE WATER SYSTEM.
18. CONTRACTOR SHALL PAY FOR AND OBTAIN ALL FEES, PERMITS AND INSPECTIONS. ALL CHARGES BY UTILITY COMPANIES SHALL BE PAID BY THIS CONTRACTOR.
19. PROVIDE MANUAL SHUT-OFF VALVES IN COLD WATER, HOT WATER AND HOT WATER RETURN AT ALL TAKEOFFS AND BRANCHES. VALVES TO BE LOCATED AS CLOSE AS POSSIBLE TO MAINS. DO NOT LOCATE VALVES ABOVE INACCESSIBLE CEILINGS.
20. PLUMBING CONTRACTOR TO COORDINATE FINAL ELEVATION AND LOCATION OF ALL FLOOR DRAINS WITH GENERAL CONTRACTOR PRIOR TO ROUGH-IN.

ABBREVIATIONS

AC	AQUATICS CONTRACTOR	FFD1	FUNNELED FLOOR DRAIN	KD1	KITCHEN DRAIN
AD1	AREA DRAIN	FF ELEV	FINISHED FLOOR ELEVATION	KS1	KITCHEN SINK
AFF	ABOVE FINISHED FLOOR	FSC	FOOD SERVICE CONTRACTOR	LAV1	LAVATORY
AFG	ABOVE FINISHED GRADE	FS1	FLOOR SINK	LT1	LAUNDRY TUB
AMP	AMPERE	FLA	FULL LOAD AMPS	MAX	MAXIMUM
AP	ACCESS PANEL	FLR	FLOOR	MIN	MINIMUM
APPROX	APPROXIMATE	FPM	FOOT/FEET PER MINUTE	MS1	MOP SINK
AVG	AVERAGE	FPS	FOOT/FEET PER SECOND	MTD	MOUNTED
AW	ACID WASTE	FT	FOOT/FEET	NA,N/A	NOT APPLICABLE
BFP1	REDUCED PRESSURE BACKFLOW PREVENTER	GAL	GALLONS	NC	NORMALLY CLOSED
		GB1	GARBAGE DISPOSAL	NIC	NOT IN CONTRACT
BOT	BOTTOM	GC	GENERAL CONTRACTOR	NO	NORMALLY OPEN
BP	BACK PRESSURE	GI1	GREASE INTERCEPTOR	NTS	NOT TO SCALE
BSMT	BASEMENT	GND	GROUND	OI1	OIL INTERCEPTOR
BWV1	BACK WATER VALVE	GPH	GALLONS PER HOUR	PC	PLUMBING CONTRACTOR
CI	CAST IRON	GPM	GALLONS PER MINUTE	PT1	PLASTER TRAP
CL	CENTER LINE	GPR1	GAS PRESSURE REGULATOR	PWH1	PROPANE WATER HEATER
CO	CLEANOUT	GPS	GALLONS PER SECOND	RD1	ROOF DRAIN
COL	COLUMN	GS1	GLASS FILLER	SE1	SEWAGE EJECTOR
CONC	CONCRETE OR CONCENTRIC	GSV	GAS SOLENOID VALVE	SH1	SHOWER
DF1	DRINKING FOUNTAIN	GT1	GREASE TRAP	SP1	SUMP PUMP
DIA, ∅	DIAMETER	GWH1	GAS WATER HEATER	SS1	SERVICE SINK
DIP	DUCTILE IRON PIPE	HB1	HOSE BIBB	SW1	SAFE WASTE
DN	DOWN	HC	HVAC CONTRACTOR	TEMP	TEMPERATURE
DN1	DOWN SPOUT NOZZLE	HEWC1	HANDICAP ELECTRIC WATER COOLER	TMV1	THERMOSTATIC MIXING VALVE
DW1	DISHWASHER			TP1	TRAP PRIMER
EC	ELECTRICAL CONTRACTOR	HGT	HEIGHT	TUB1	TUB/SHOWER
ECO1	EXTERIOR CLEANOUT	HP	HORSE POWER	UR1	URINAL
ED1	EMERGENCY OVERFLOW DRAIN	HLAV1	HANDICAP LAVATORY	US1	UTILITY SINK
EL	ELEVATION	HS1	HAND SINK	VTR	VENT THROUGH ROOF
ESP1	ELEVATOR SUMP PUMP	HSH1	HANDICAP SHOWER	WB1	WASHER BOX
ET1	EXPANSION TANK	HUR1	HANDICAP URINAL	WC1	WATER CLOSET
EWC1	ELECTRIC WATER COOLER	HWC1	HANDICAP WATER CLOSET	WCO1	WALL CLEAN OUT
EWH1	ELECTRIC WATER HEATER	HWRP1	HOT WATER RETURN PUMP	WHA1	WATER HAMMER ARRESTER
(E),EXIST	EXISTING	IB1	ICE MAKER BOX	WH1	WALL HYDRANT
FCO	FLOOR CLEAN OUT	I.E.	INVERT ELEVATION	WPV1	WHIRLPOOL VALVE
FD1	FLOOR DRAIN	INV	INVERT OF PIPE	WSV	WATER SOLENOID VALVE

MISCELLANEOUS SYMBOLS

- POINT OF CONNECTION-NEW TO EXISTING
- POINT OF DEMOLITION CONCLUSION
- X — DRAWING NOTE SYMBOL
- X — REVISION SYMBOL
- DIRECTION OF VIEW
- X / X — SECTION NUMBER / DRAWING ON WHICH SECTION OR DETAIL IS SHOWN
- X / X — DETAIL OR SECTION NUMBER / DRAWING FROM WHICH SECTION OR DETAIL IS TAKEN

PLUMBING SYMBOLS

	DOMESTIC COLD WATER
	110°F HOT WATER
	SANITARY
	RAIN/STORM WATER
	VENT
	GAS
SPRK	SPRINKLER
(E)	EXISTING TO REMAIN
	EXISTING TO BE REMOVED
	GATE VALVE
	BALL VALVE
	BUTTERFLY VALVE
	GAS VALVE
	CHECK VALVE
	MIXING VALVE
	OS&Y VALVE
	WATER HAMMER ARRESTER
	BACKFLOW VALVE
	SOLENOID VALVE
	BALANCING VALVE
	PIPE CAP
	PIPE RISE
	PIPE DROP
	UNION
	ELBOW
	TEE
AP	ACCESS PANEL
	ELECTRICAL PANEL BY EC
A1	AIR STATION
	PRESSURE & TEMPERATURE RELIEF VALVE
	THERMOMETER
	AQUASTAT

NOTE:
NOT ALL ABBREVIATIONS AND SYMBOLS INDICATED MAY APPEAR ON THESE CONTRACT DRAWINGS. THIS IS FOR REFERENCE ONLY.

PLUMBING DRAWING LIST

P0.0	PLUMBING INFORMATION SHEET
P1.0	FIRST FLOOR PLAN - UNIT A - DOMESTIC WATER
P1.1	FIRST FLOOR PLAN - UNIT B - DOMESTIC WATER
P2.0	FIRST FLOOR PLAN - UNIT A - SANITARY
P2.1	FIRST FLOOR PLAN - UNIT B - SANITARY
P4.0	PLUMBING DETAILS
P4.1	PLUMBING ISOMETRICS - SANITARY
P5.0	PLUMBING SCHEDULES

Professional Certification. I hereby certify that these documents were prepared or approved by me, and that I am a duly licensed professional engineer under the laws of the State of Maryland. License No. 49693, Expiration Date: 2020-07-24.

STATE OF MARYLAND — KATHRYN PARFITT — 49693 — PROFESSIONAL ENGINEER

est. 1776

ALL REPORTS, PLANS SPECIFICATIONS AND COMPUTER FILES RELATING TO THIS PROJECT ARE THE PROPERTY OF CRABTREE, ROHRBAUGH & ASSOCIATES. CRABTREE ROHRBAUGH & ASSOCIATES RETAINS ALL COMMON LAW, STATUTE AND OTHER RESERVED RIGHTS INCLUDING THE COPYRIGHT THERETO. REPRODUCTION OF THE MATERIAL HERIN OR SUBSTANTIAL USE WITHOUT WRITTEN PERMISSION OF CRABTREE, ROHRBAUGH & ASSOCIATES VIOLATES THE COPYRIGHT LAWS OF THE UNITED STATES AND WILL BE SUBJECT TO LEGAL PROSECUTION.
© CRABTREE, ROHRBAUGH & ASSOCIATES, INC 2019

REVISIONS

#	MM-DD-YR	NAME	DESCRIPTION OF CHANGES

CRABTREE ROHRBAUGH & ASSOCIATES - ARCHITECTS
100 WEST ROAD, SUITE 402, TOWSON MD 21204 410-528-0272
www.cra-architects.com
MECHANICSBURG, PENNSYLVANIA CHARLOTTESVILLE, VIRGINIA WHITE SULPHUR SPRINGS, WEST VIRGINIA

PROPOSED NEW
WASHINGTON COUNTY PUBLIC SAFETY TRAINING CENTER
WASHINGTON COUNTY PROJECT NO. 28-266
18350 PUBLIC SAFETY PLACE
HAGERSTOWN, MD 21740

CR

PLUMBING INFORMATION SHEET

PLOT SCALE: AS INDICATED

FILENAME:

DATE: December 18, 2019

PROJECT 3089

P0.0

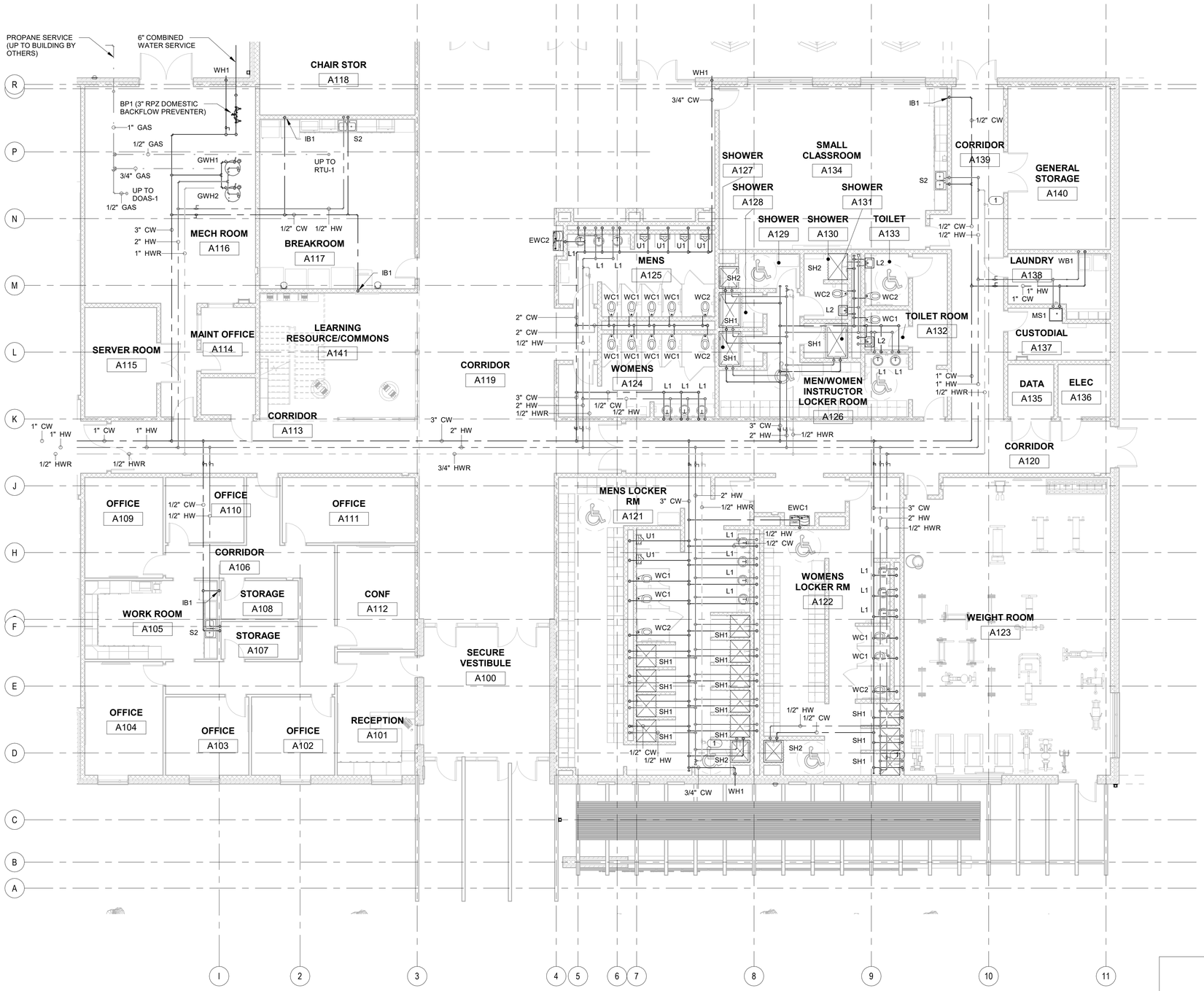

FIRST FLOOR PLAN - UNIT A - DOMESTIC WATER

SCALE: 1/8" = 1'-0"

NOTES BY SYMBOL: (#)
(THIS SHEET ONLY)

1. PROVIDE CIRCUITSOLVER CSUA BALANCING ASSEMBLY WITH THERMOSTATIC VALVE AND SHUTOFFS

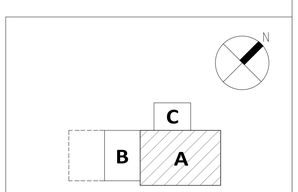

KEY PLAN

Professional Certification. I hereby certify that these documents were prepared or approved by me, and that I am a duly licensed professional engineer under the laws of the State of Maryland. License No. 49693, Expiration Date: 2020-07-24.

STATE OF MARYLAND
KATHRYN PARFITT
49693
PROFESSIONAL ENGINEER

ALL REPORTS, PLANS SPECIFICATIONS AND COMPUTER FILES RELATING TO THIS PROJECT ARE THE PROPERTY OF CRABTREE, ROHRBAUGH & ASSOCIATES. CRABTREE ROHRBAUGH & ASSOCIATES RETAINS ALL COMMON LAW, STATUTE AND OTHER RESERVED RIGHTS INCLUDING THE COPYRIGHT THERETO. REPRODUCTION OF THE MATERIAL HERIN OR SUBSTANTIAL USE WITHOUT WRITTEN PERMISSION OF CRABTREE, ROHRBAUGH & ASSOCIATES VIOLATES THE COPYRIGHT LAWS OF THE UNITED STATES AND WILL BE SUBJECT TO LEGAL PROSECUTION.
© CRABTREE, ROHRBAUGH & ASSOCIATES, INC 2019

REVISIONS

#	MM-DD-YR	NAME	DESCRIPTION OF CHANGES

CRABTREE ROHRBAUGH & ASSOCIATES - ARCHITECTS
100 WEST ROAD, SUITE 402, TOWSON MD 21204 410-528-0272
www.cra-architects.com
MECHANICSBURG, PENNSYLVANIA CHARLOTTESVILLE, VIRGINIA WHITE SULPHUR SPRINGS, WEST VIRGINIA

PROPOSED NEW
WASHINGTON COUNTY PUBLIC SAFETY TRAINING CENTER
WASHINGTON COUNTY PROJECT NO. 28-266
18350 PUBLIC SAFETY PLACE
HAGERSTOWN, MD 21740

FIRST FLOOR PLAN - UNIT A - DOMESTIC WATER

PLOT SCALE: 1/8" = 1'-0"
FILENAME:
DATE: December 18, 2019

PROJECT 3089

P1.0

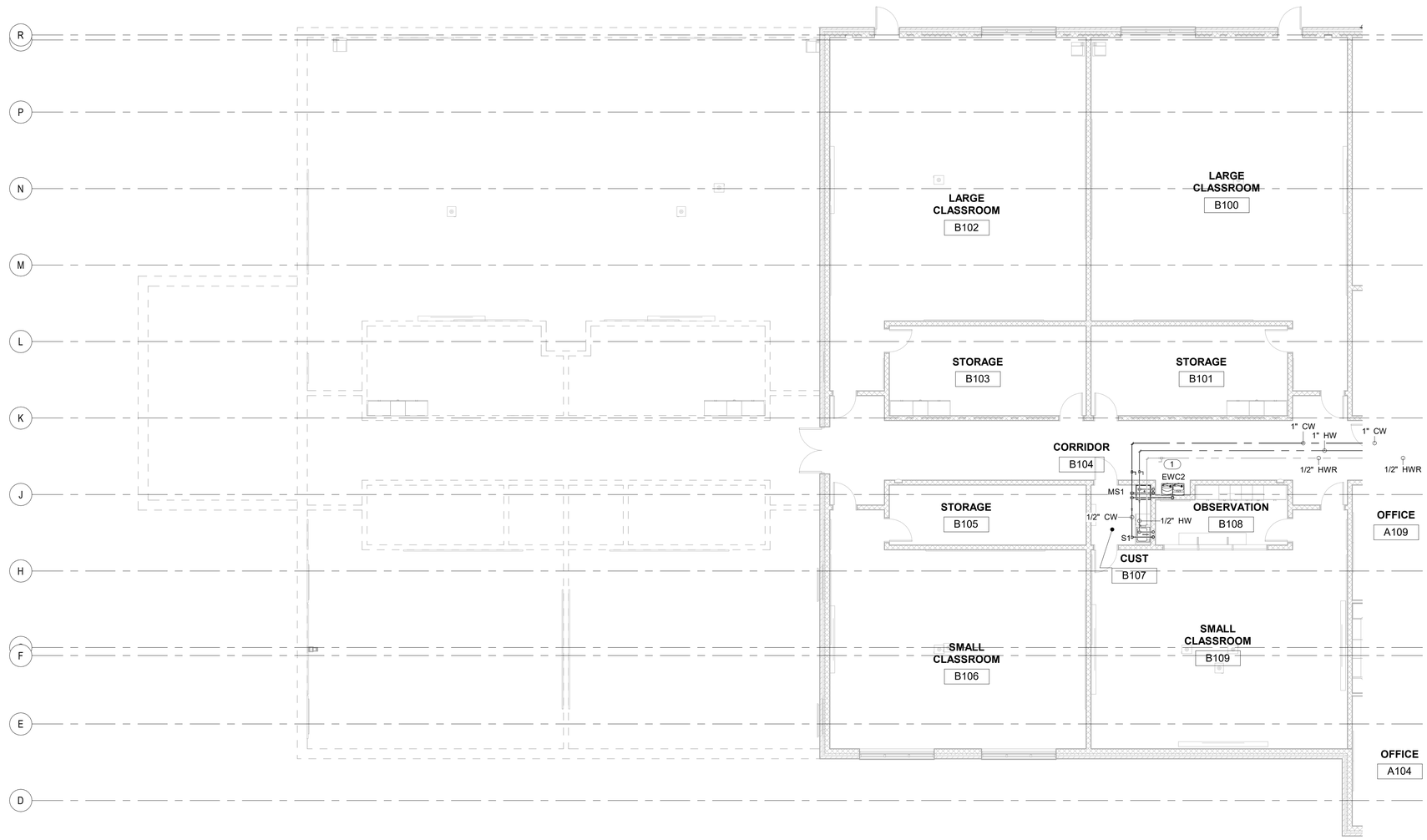

FIRST FLOOR PLAN - UNIT B - DOMESTIC WATER

SCALE: 1/8" = 1'-0"

NOTES BY SYMBOL: (#)
(THIS SHEET ONLY)

1. PROVIDE CIRCUITSOLVER CSUA BALANCING ASSEMBLY WITH THERMOSTATIC VALVE AND SHUTOFFS

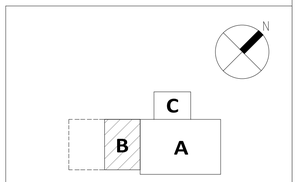

KEY PLAN

Professional Certification. I hereby certify that these documents were prepared or approved by me, and that I am a duly licensed professional engineer under the laws of the State of Maryland. License No. 49693, Expiration Date: 2020-07-24.

ALL REPORTS, PLANS SPECIFICATIONS AND COMPUTER FILES RELATING TO THIS PROJECT ARE THE PROPERTY OF CRABTREE, ROHRBAUGH & ASSOCIATES. CRABTREE ROHRBAUGH & ASSOCIATES RETAINS ALL COMMON LAW, STATUTE AND OTHER RESERVED RIGHTS INCLUDING THE COPYRIGHT THERETO. REPRODUCTION OF THE MATERIAL HERIN OR SUBSTANTIAL USE WITHOUT WRITTEN PERMISSION OF CRABTREE, ROHRBAUGH & ASSOCIATES VIOLATES THE COPYRIGHT LAWS OF THE UNITED STATES AND WILL BE SUBJECT TO LEGAL PROSECUTION.
© CRABTREE, ROHRBAUGH & ASSOCIATES, INC 2019

REVISIONS

#	MM-DD-YR	NAME	DESCRIPTION OF CHANGES

CRABTREE ROHRBAUGH & ASSOCIATES - ARCHITECTS
100 WEST ROAD, SUITE 402, TOWSON MD 21204 410-528-0272
www.cra-architects.com
MECHANICSBURG, PENNSYLVANIA CHARLOTTESVILLE, VIRGINIA WHITE SULPHUR SPRINGS, WEST VIRGINIA

PROPOSED NEW
WASHINGTON COUNTY PUBLIC SAFETY TRAINING CENTER
WASHINGTON COUNTY PROJECT NO. 28-266
18350 PUBLIC SAFETY PLACE
HAGERSTOWN, MD 21740

FIRST FLOOR PLAN - UNIT B - DOMESTIC WATER

PLOT SCALE: 1/8" = 1'-0"

FILENAME:

DATE: December 18, 2019

PROJECT
3089

P1.1

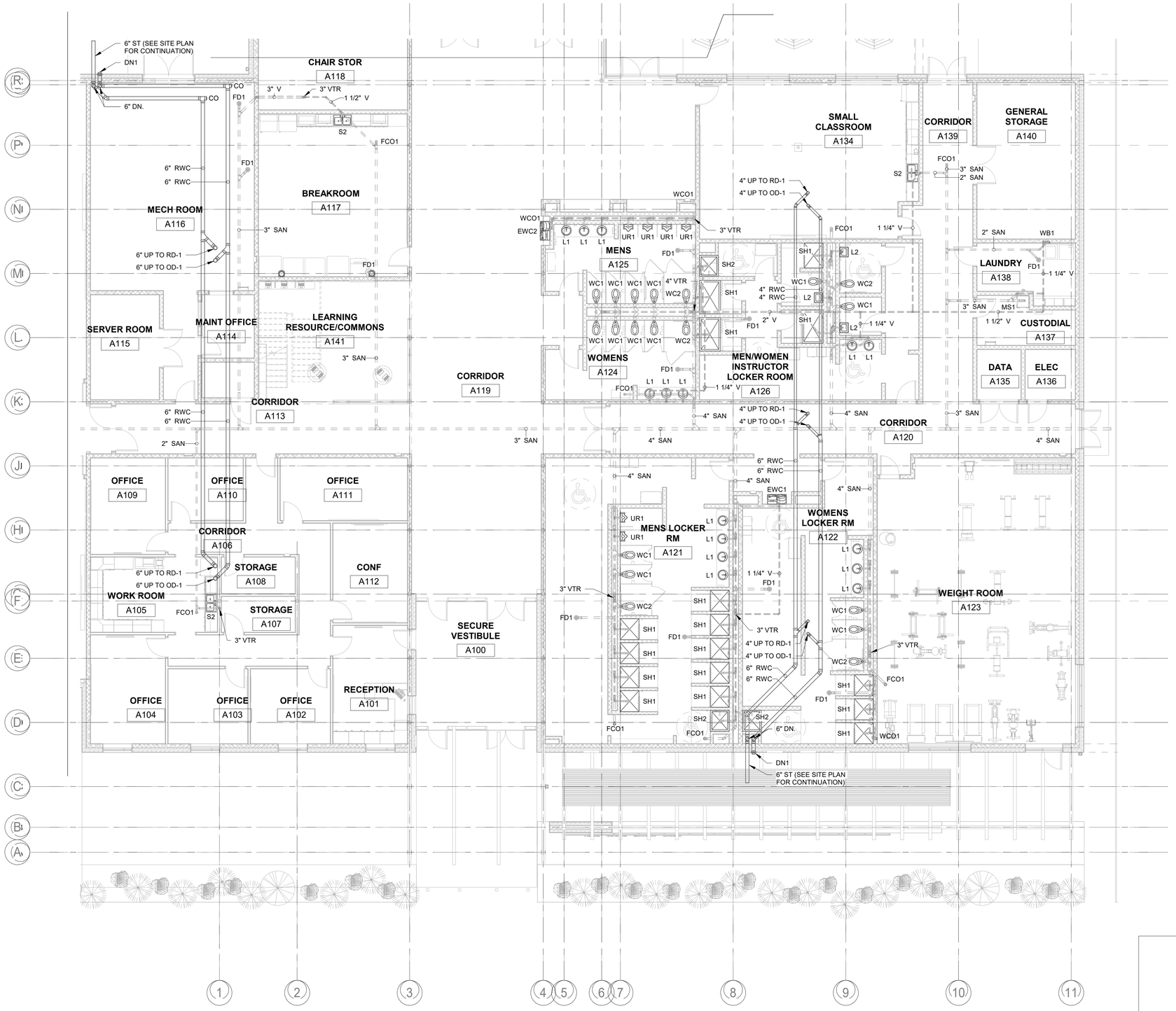

FIRST FLOOR PLAN - UNIT A - SANITARY

SCALE: 1/8" = 1'-0"

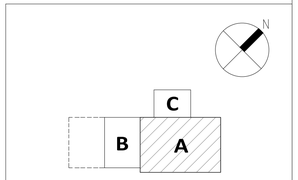

KEY PLAN

Professional Certification. I hereby certify that these documents were prepared or approved by me, and that I am a duly licensed professional engineer under the laws of the State of Maryland. License No. 49693, Expiration Date: 2020-07-24.

STATE OF MARYLAND
KATHRYN PARFITT
49693
PROFESSIONAL ENGINEER

ALL REPORTS, PLANS SPECIFICATIONS AND COMPUTER FILES RELATING TO THIS PROJECT ARE THE PROPERTY OF CRABTREE, ROHRBAUGH & ASSOCIATES. CRABTREE ROHRBAUGH & ASSOCIATES RETAINS ALL COMMON LAW, STATUTE AND OTHER RESERVED RIGHTS INCLUDING THE COPYRIGHT THERETO. REPRODUCTION OF THE MATERIAL HERIN OR SUBSTANTIAL USE WITHOUT WRITTEN PERMISSION OF CRABTREE, ROHRBAUGH & ASSOCIATES VIOLATES THE COPYRIGHT LAWS OF THE UNITED STATES AND WILL BE SUBJECT TO LEGAL PROSECUTION.
© CRABTREE, ROHRBAUGH & ASSOCIATES, INC 2019

REVISIONS

#	MM-DD-YR	NAME	DESCRIPTION OF CHANGES

CRABTREE ROHRBAUGH & ASSOCIATES - ARCHITECTS
100 WEST ROAD, SUITE 402, TOWSON MD 21204 410-528-0272
www.cra-architects.com
MECHANICSBURG, PENNSYLVANIA CHARLOTTESVILLE, VIRGINIA WHITE SULPHUR SPRINGS, WEST VIRGINIA

PROPOSED NEW
WASHINGTON COUNTY PUBLIC SAFETY TRAINING CENTER
WASHINGTON COUNTY PROJECT NO. 28-266
18350 PUBLIC SAFETY PLACE
HAGERSTOWN, MD 21740

FIRST FLOOR PLAN - UNIT A - SANITARY

PLOT SCALE: 1/8" = 1'-0"

FILENAME:

DATE: December 18, 2019

PROJECT
3089

P2.0

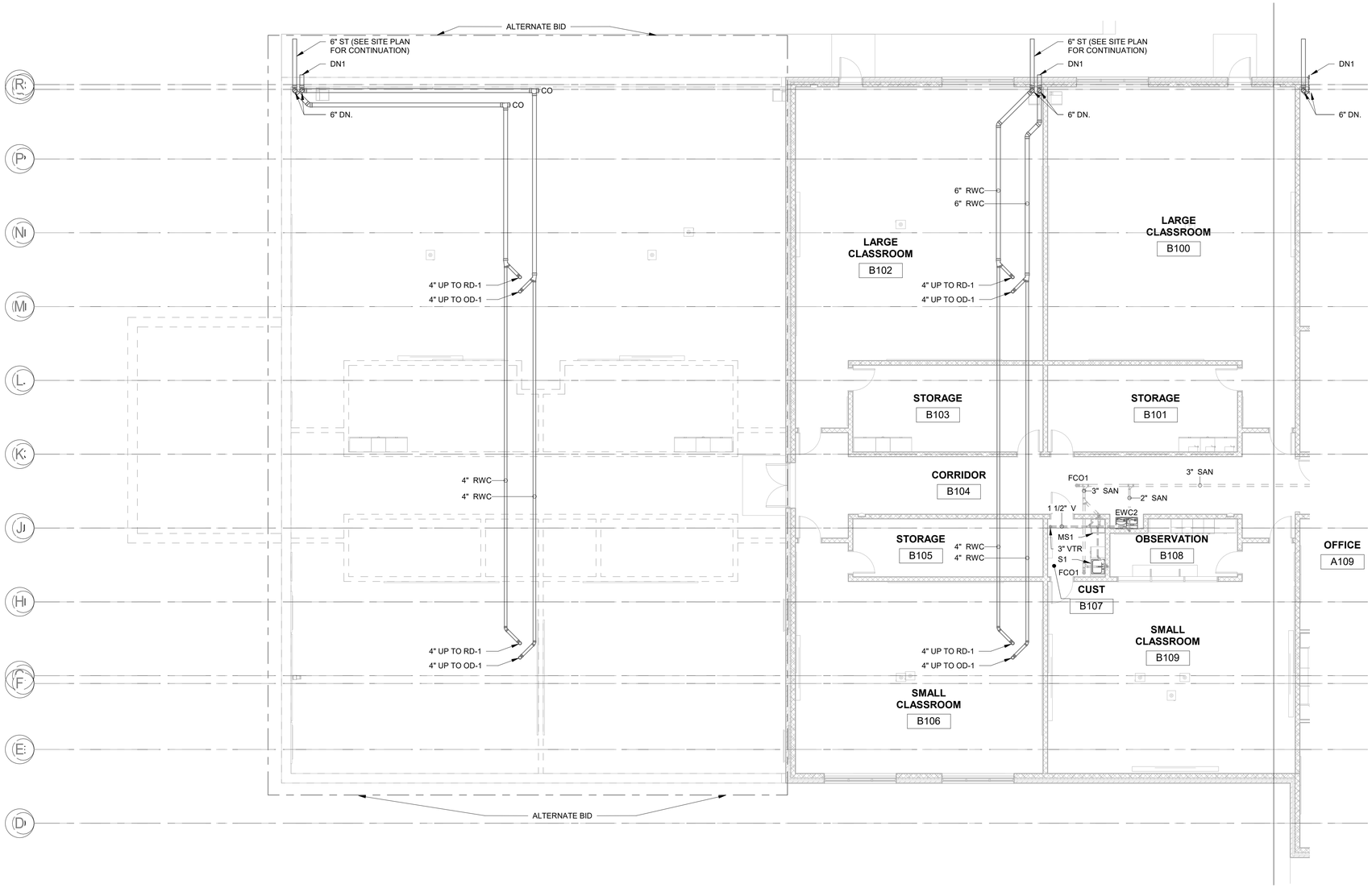

FIRST FLOOR PLAN - UNIT B - SANITARY

SCALE: 1/8" = 1'-0"

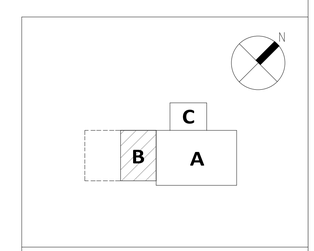

KEY PLAN

Professional Certification. I hereby certify that these documents were prepared or approved by me, and that I am a duly licensed professional engineer under the laws of the State of Maryland. License No. 49693, Expiration Date: 2020-07-24.

STATE OF MARYLAND
KATHRYN PARFITT
49693
PROFESSIONAL ENGINEER

ALL REPORTS, PLANS SPECIFICATIONS AND COMPUTER FILES RELATING TO THIS PROJECT ARE THE PROPERTY OF CRABTREE, ROHRBAUGH & ASSOCIATES. CRABTREE ROHRBAUGH & ASSOCIATES RETAINS ALL COMMON LAW, STATUTE AND OTHER RESERVED RIGHTS INCLUDING THE COPYRIGHT THERETO. REPRODUCTION OF THE MATERIAL HERIN, OR SUBSTANTIAL USE WITHOUT WRITTEN PERMISSION OF CRABTREE, ROHRBAUGH & ASSOCIATES VIOLATES THE COPYRIGHT LAWS OF THE UNITED STATES AND WILL BE SUBJECT TO LEGAL PROSECUTION.
© CRABTREE, ROHRBAUGH & ASSOCIATES, INC 2019

REVISIONS

#	MM-DD-YR	NAME	DESCRIPTION OF CHANGES

CRABTREE ROHRBAUGH & ASSOCIATES - ARCHITECTS
100 WEST ROAD, SUITE 402, TOWSON MD 21204 410-528-0272
www.cra-architects.com
MECHANICSBURG, PENNSYLVANIA CHARLOTTESVILLE, VIRGINIA WHITE SULPHUR SPRINGS, WEST VIRGINIA

PROPOSED NEW
WASHINGTON COUNTY PUBLIC SAFETY TRAINING CENTER
WASHINGTON COUNTY PROJECT NO. 28-266
18350 PUBLIC SAFETY PLACE
HAGERSTOWN, MD 21740

CR

FIRST FLOOR PLAN - UNIT B - SANITARY

PLOT SCALE: 1/8" = 1'-0"

FILENAME:

DATE: December 18, 2019

PROJECT
3089

P2.1

RISER NOTES:

- (A) 4" OSY VALVE
- (B) 4" CAPPED
- (C) NEW 6" FIRE/WATER SERVICE
- (D) REDUCED PRESSURE ZONE BACKFLOW PREVENTER, WITH AIR GAP DRAIN PIPED FULL SIZE DOWN TO FLOOR DRAIN
- (E) PRESSURE GAGE 0-100 PSI
- (F) DRAIN VALVE
- (G) STRAINER WITH BLOWDOWN

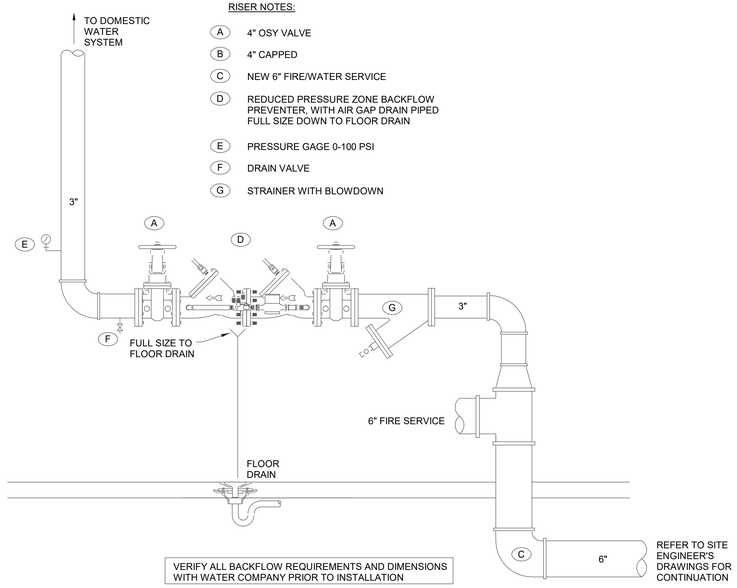

VERIFY ALL BACKFLOW REQUIREMENTS AND DIMENSIONS WITH WATER COMPANY PRIOR TO INSTALLATION

DOMESTIC WATER SERVICE DIAGRAM

NO SCALE

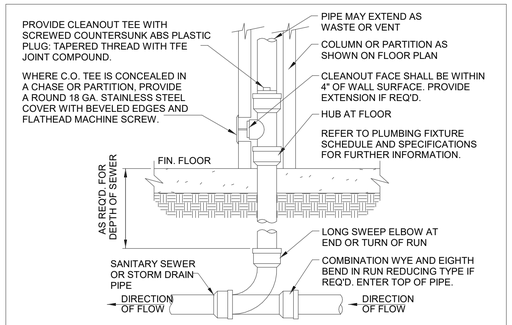

PROVIDE WCO AT BASE OF ALL RAIN-LEADER DOWNSPOUTS. PROVIDE WCO WHERE SHOWN ON PLAN, AND ON SANITARY WASTE BRANCHES NOT SERVED WITH A FLOOR CLEANOUT. LOCATE ABOVE FIXTURE FLOOD RIM WITHIN 4' OF FLOOR.

WALL CLEANOUT DETAIL-WCO

NO SCALE

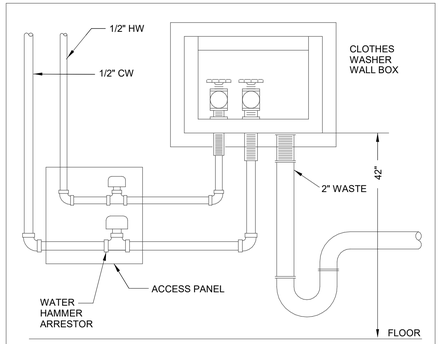

WASHER BOX DETAIL

NO SCALE

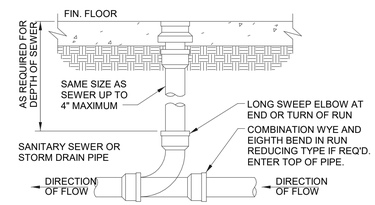

ROUND SECURED GASKETED NICKEL BRONZE ADJUSTABLE TOP WITH "CO" CAST IN COVER. PROVIDE WITH VARIATIONS SUITABLE FOR FLOOR COVERING (CARPET, TILE, OR UNFINISHED FLOORS). PROVIDE GASKETED PLUG IN CAST IRON BODY. LOCATE AT BUILDING EXIT, AT ENDS OF RUNS, AT TURNS OF PIPE GREATER THAN 45 DEGREES, AT 50' INTERVALS ON STRAIGHT RUNS, AND/OR WHERE SHOWN ON PLANS. LOCATE CLEANOUTS WHERE THERE IS 18" CLEAR ON ALL SIDES.

FLOOR CLEANOUT-FCO

NO SCALE

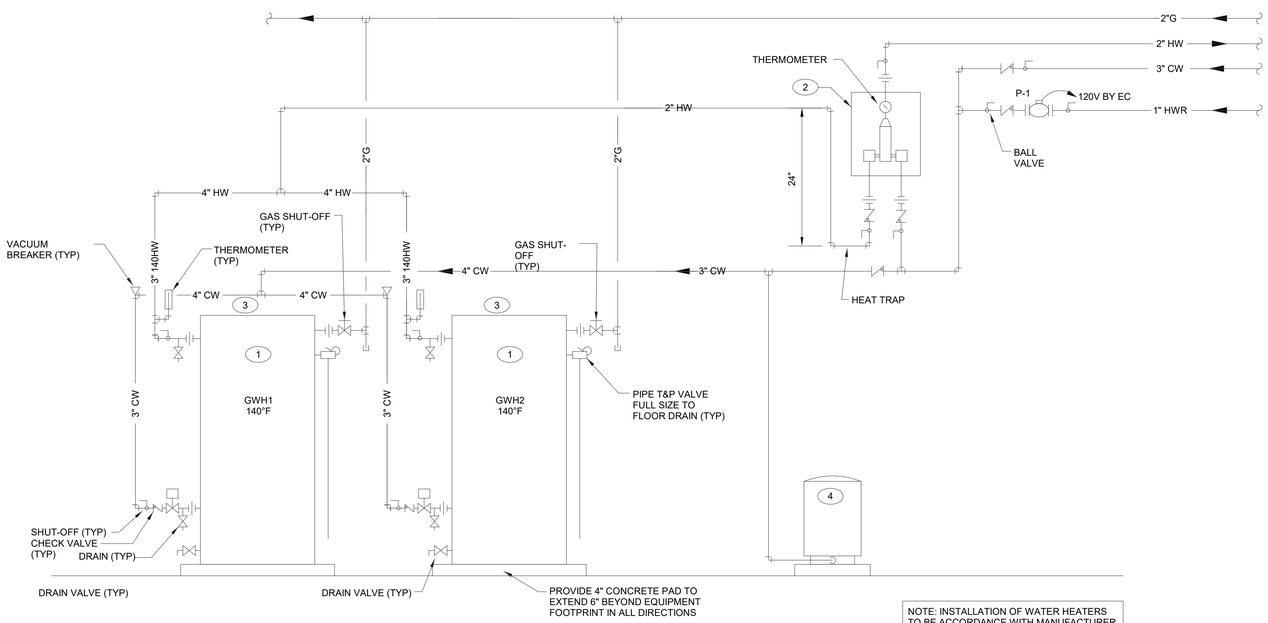

NOTE: INSTALLATION OF WATER HEATERS TO BE ACCORDANCE WITH MANUFACTURER INSTALLATION REQUIREMENTS

NOTE: MAINTAIN MINIMUM CLEARANCES IN ACCORDANCE WITH ALL APPLICABLE CODES AND INSTALLATION REQUIREMENTS

DETAIL NOTES: (#)

1. GAS FIRED WATER HEATER PER SCHEDULE.
2. POWERS HYDRO GUARD XP MODEL MM435 THERMOSTATIC MIXING VALVE. SET OUTLET TO 110°F
3. PROVIDE 3" PVC VENT AND COMBUSTION AIR PIPING. INSTALL PER MANUFACTURER'S WRITTEN INSTRUCTIONS. PROVIDE OFFSETS AS REQUIRED TO MAINTAIN 10' CLEARANCE FROM HVAC UNIT INTAKES.
4. AMTROL THERM-X-TROL MODEL ST-60V-C EXPANSION TANK, 25.0 GALLON TOTAL VOLUME, 11 GALLON MAXIMUM ACCEPTANCE.

GAS FIRED WATER HEATER DETAIL

NO SCALE

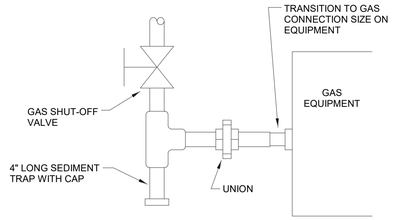

EQUIPMENT GAS CONNECTION DETAIL

NO SCALE

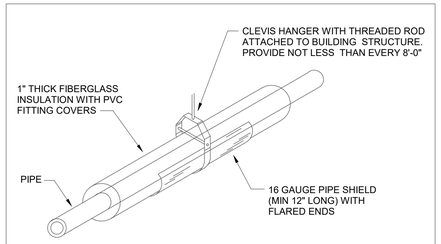

TYPICAL PIPING HANGER DETAIL

NO SCALE

Professional Certification. I hereby certify that these documents were prepared or approved by me, and that I am a duly licensed professional engineer under the laws of the State of Maryland. License No. 49693, Expiration Date: 2020-07-24.

STATE OF MARYLAND KATHRYN PARETTI 49693 PROFESSIONAL ENGINEER

est. 1776

ALL REPORTS, PLANS SPECIFICATIONS AND COMPUTER FILES RELATING TO THIS PROJECT ARE THE PROPERTY OF CRABTREE, ROHRBAUGH & ASSOCIATES. CRABTREE ROHRBAUGH & ASSOCIATES RETAINS ALL COMMON LAW, STATUTE AND OTHER RESERVED RIGHTS INCLUDING THE COPYRIGHT THERETO. REPRODUCTION OF THE MATERIAL HERIN OR SUBSTANTIAL USE WITHOUT WRITTEN PERMISSION OF CRABTREE, ROHRBAUGH & ASSOCIATES VIOLATES THE COPYRIGHT LAWS OF THE UNITED STATES AND WILL BE SUBJECT TO LEGAL PROSECUTION.
© CRABTREE, ROHRBAUGH & ASSOCIATES, INC 2019

REVISIONS

#	MM-DD-YR	NAME	DESCRIPTION OF CHANGES

CRABTREE ROHRBAUGH & ASSOCIATES - ARCHITECTS
100 WEST ROAD, SUITE 402, TOWSON MD 21204 410-528-0272
www.cra-architects.com
MECHANICSBURG, PENNSYLVANIA CHARLOTTESVILLE, VIRGINIA WHITE SULPHUR SPRINGS, WEST VIRGINIA

PROPOSED NEW
WASHINGTON COUNTY PUBLIC SAFETY TRAINING CENTER
WASHINGTON COUNTY PROJECT NO. 28-266
18350 PUBLIC SAFETY PLACE
HAGERSTOWN, MD 21740

PLUMBING DETAILS

PLOT SCALE: AS INDICATED

FILENAME:

DATE: December 18, 2019

PROJECT 3089

P4.0

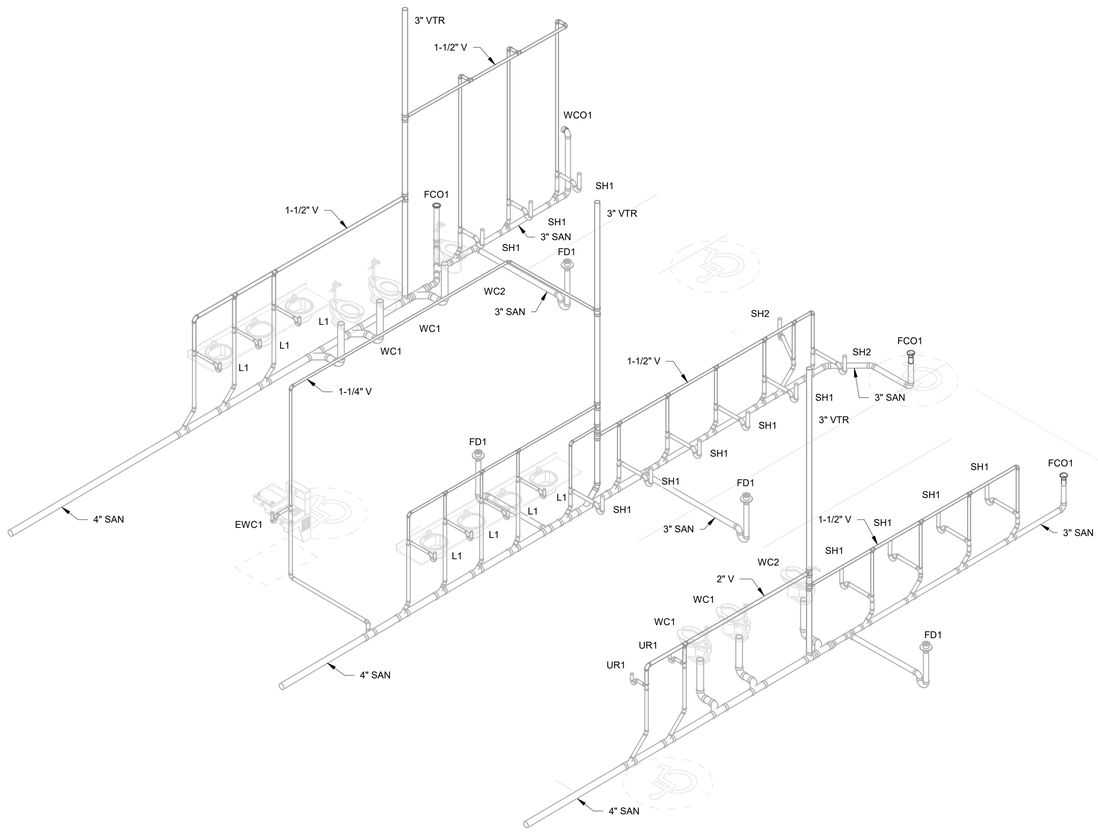

SANITARY PIPING ISOMETRIC
MENS/WOMENS LOCKER ROOM A121/A122

NO SCALE

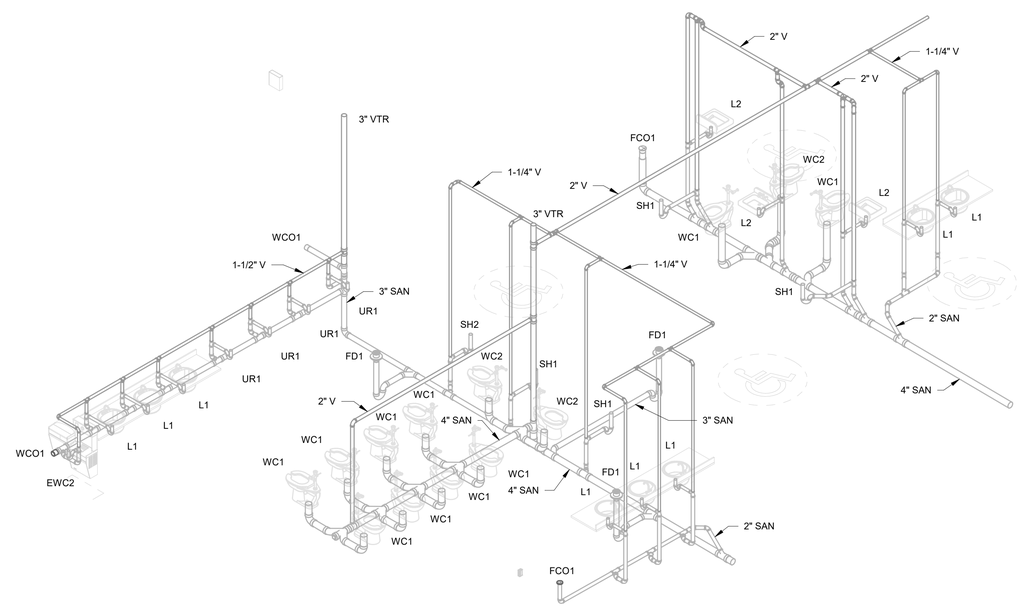

SANITARY PIPING ISOMETRIC
MENS/WOMENS ROOM A124/A125/A126

NO SCALE

Professional Certification. I hereby certify that these documents were prepared or approved by me, and that I am a duly licensed professional engineer under the laws of the State of Maryland. License No. 49693, Expiration Date: 2020-07-24.

STATE OF MARYLAND
KATHRYN PARFITT
49693
PROFESSIONAL ENGINEER

ALL REPORTS, PLANS SPECIFICATIONS AND COMPUTER FILES RELATING TO THIS PROJECT ARE THE PROPERTY OF CRABTREE, ROHRBAUGH & ASSOCIATES. CRABTREE ROHRBAUGH & ASSOCIATES RETAINS ALL COMMON LAW, STATUTE AND OTHER RESERVED RIGHTS INCLUDING THE COPYRIGHT THERETO. REPRODUCTION OF THE MATERIAL HERIN OR SUBSTANTIAL USE WITHOUT WRITTEN PERMISSION OF CRABTREE, ROHRBAUGH & ASSOCIATES VIOLATES THE COPYRIGHT LAWS OF THE UNITED STATES AND WILL BE SUBJECT TO LEGAL PROSECUTION.
© CRABTREE, ROHRBAUGH & ASSOCIATES, INC 2019

REVISIONS

#	MM-DD-YR	NAME	DESCRIPTION OF CHANGES

CRABTREE ROHRBAUGH & ASSOCIATES - ARCHITECTS
100 WEST ROAD, SUITE 402, TOWSON MD 21204 410-528-0272
www.cra-architects.com
MECHANICSBURG, PENNSYLVANIA CHARLOTTESVILLE, VIRGINIA WHITE SULPHUR SPRINGS, WEST VIRGINIA

PROPOSED NEW
WASHINGTON COUNTY PUBLIC SAFETY TRAINING CENTER
WASHINGTON COUNTY PROJECT NO. 28-266
18350 PUBLIC SAFETY PLACE
HAGERSTOWN, MD 21740

PLUMBING ISOMETRICS - SANITARY

PLOT SCALE:

FILENAME:

DATE: December 18, 2019

PROJECT
3089

P4.1

PLUMBING FIXTURE SCHEDULE

SYMBOL	FIXTURE TYPE	MANUFACTURER	MODEL NO.	FAUCET/ VALVE	ANSI/ASME APPROVALS	MOUNTING/ SUPPORT	* MINIMUM PIPE SIZES					DFU **	WSFU **	ELECTRIC	NOTES
							HW	CW	SAN	TRAP	VENT				
BP1	BACKFLOW ASSEMBLY	WATTS	LF909OSY	-	ASSE 1013	SUSPEND	-	3"	-	-	-	-	-	-	PROVIDE WITH AIR GAP PIPED TO FLOOR DRAIN
DN1	DOWNSPOUT NOZLE	ZURN	Z199	-	-	WALL	-	-	3" THRU 6"	-	-	-	-	-	-
ECO1	EXTERIOR CLEAN OUT	ZURN	Z1400	-	A112.21.1M	FINISHED GRADE	-	-	2" THRU 6"	-	-	-	-	-	INSTALL FLUSH AND LEVEL WITH CONCRETE OR FINISHED GRADE
ES1	EMERGENCY SHOWER	GUARDIAN	GBF1909	-	ANSI Z358.1	FLOOR	1-1/4"	1-1/4"	-	-	-	-	-	-	PROVIDE G3800LF THERMOSTATIC MIXING VALVE
FCO1	FLOOR CLEAN OUT	ZURN	Z1400	-	A112.21.1M	FLOOR	-	-	2" THRU 6"	-	-	-	-	-	INSTALL FLUSH AND LEVEL WITH FLOOR, SIZE TO MATCH PIPE SIZE
FD1	FLOOR DRAIN	ZURN	ZN415B	-	A112.6.3-2001	FLOOR	-	-	2"	2"	1½"	-	-	-	PROVIDE WITH TRAP SEAL DEVICE
FD2	FLOOR DRAIN	ZURN	ZN415B	-	A112.6.3-2001	FLOOR	-	-	3"	3"	2"	-	-	-	PROVIDE WITH TRAP SEAL DEVICE
HB1	HOSE BIBB	WOODFORD	24	-	ASSE STD 1011	WALL	¾"	¾"	-	-	-	-	-	-	VACUUM BREAKER TYPE WITH ACCESSIBLE SHUT-OFF VALVE
EWC1	ELECTRIC WATER COOLER	ELKAY	LZSTL8WSSK BI-LEVEL W/ BOTTLE FILL	-	NSF61 SECTION 9-1997B	WALL CARRIER	-	½"	1½"	1½"	1½"	.5	.25	120V, 5.0A	WITH FILTER; MOUNT 36" AFF TO TOP OF SPOUT
EWC2	ELECTRIC WATER COOLER	ELKAY	LZSTL8SC BI-LEVEL	-	NSF61 SECTION 9-1997B	WALL CARRIER	-	½"	1½"	1½"	1½"	.5	.25	120V, 5.0A	WITH FILTER; MOUNT 36" AFF TO TOP OF SPOUT
L1	LAVATORY	AMERICAN STANDARD	OVALYN 0495.221	ZURN Z6915-XL	A112.19.2M/ A117.1	COUNTER UNDERMOUNT	½"	½"	1½"	1½"	1½"	1	.7/2	-	0.5 GPM; PROVIDE THERMOSTATIC MIXING VALVE AND HARDWIRED POWER SUPPLY
L2	LAVATORY	AMERICAN STANDARD	COMRADE 0124.131	ZURN Z6915-XL	A112.19.2M/ A117.1	WALL CARRIER	½"	½"	1½"	1½"	1½"	1	.7/2	-	SEE NOTE 3; PROVIDE THERMOSTATIC MIXING VALVE, HARDWIRED POWER SUPPLY, AND ZURN Z1231 CONCEALED ARM CARRIER
WC1	WATER CLOSET	AMERICAN STANDARD	MADERA 2855.128	ZURN ZEMS6000PL-IS	A112.19.2M/ A112.19.6M/A117.1	FLOOR	-	1"	4"	-	2"	3/4	6/10		1.28 GPF, PROVIDE BOLT CAPS, AMERICAN STANDARD SEAT 5901.100, HARDWIRED POWER SUPPLY
WC2	WATER CLOSET	AMERICAN STANDARD	MADERA 2857.128	ZURN ZEMS6000PL-IS	A112.19.2M/ A112.19.6M/A117.1	FLOOR	-	1"	4"	-	2"	3/4	6/10		1.28 GPF, PROVIDE BOLT CAPS, AMERICAN STANDARD SEAT 5901.100, HARDWIRED POWER SUPPLY
IB1	ICEMAKER BOX	GUY GRAY	AB9700	-	-	WALL	-	½"	-	-	-	-	-	-	PROVIDE WITH 1/4 TURN VALVE AND WHITE FINISH.
WB1	WASHER BOX	GUY GRAY	T200TPABSQT	-	-	WALL	½"	½"	2"	2"	1½"	-	-	-	PROVIDE WITH 1/4 TURN VALVE AND WHITE FINISH.
S1	SINK	ELKAY	ELUHAD141455PD	ELKAY LK1000CR	A112.19.3M	COUNTER UNDERMOUNT	½"	½"	1½"	1½"	1½"	2	1.4	-	WITH LK99 DUO STRAINER AND TAILPIECE. PROVIDE THERMOSTATIC MIXING VALVE AND WATER SAVER EW1020 DECK-MOUNT DRENCH HOSE WITH MIXING VALVE. SEE NOTE 3.
S2	SINK	ELKAY	ELUHAD311855PD	ELKAY LK1000CR	A112.19.3M	COUNTER UNDERMOUNT	½"	½"	1½"	1½"	1½"	2	1.4	-	WITH LK99 DUO STRAINER AND TAILPIECE. PROVIDE THERMOSTATIC MIXING VALVE. SEE NOTE 3.
MS1	MOP SINK	FIAT	TSB3010 24"x24"x12"	FIAT 830-AA	-	FLOOR	¾"	¾"	3"	3"	2"	2	3	-	SEE NOTE 5
OD1	OVERFLOW DRAIN	ZURN	Z100-W2	-	-	ROOF	-	-	4" & 6"	-	-	-	-	-	SIZE TO MATCH PIPE SIZE. SEE NOTE 6
RD1	ROOF DRAIN	ZURN	Z100-DP-EB	-	A112.6.45-2003	ROOF	-	-	4" & 6"	-	-	-	-	-	SIZE TO MATCH PIPE SIZE, SEE NOTE 6
SH1	SHOWER	BY GC	-	ZURN 7301-SS-MT	A117.1/ Z-124-2	WALL (SET TO ACCEPT TILE)	½"	½"	-	-	-	6	12	-	PROVIDE FD-1 FLOOR DRAIN
SH2	SHOWER	BY GC	-	ZURN 7301-SS-MT-HW6	A117.1/ Z-124-2	WALL (SET TO ACCEPT TILE)	½"	½"	-	-	-	6	12	-	PROVIDE FD-1 FLOOR DRAIN
UR1	URINAL	AMERICAN STANDARD	WASHBROOK 6590.001	ZURN ZEMS6003AV-IS	A112.19.2M/ A112.19.6M/A117.1	WALL CARRIER	-	1"	2"	-	1½"	2	-	-	MOUNT RIM 24" AFF, CAULK TO WALL.; PROVIDE HARDWIRED POWER SUPPLY
WCO1	WALL CLEAN OUT	ZURN	Z1441	-	A112.36.2M	WALL	-	-	2" THRU 6"	-	-	-	-	-	-
WH1	FREEZE PROOF WALL HYDRANT	ZURN	Z1320-CL	-	A112.21.3M	WALL	-	¾"	-	-	-	-	-	-	RECESSED WITH LOCK; MOUNT 24" AFG; PROVIDE WITH INTERIOR-MOUNTED ACCESSIBLE SHUT-OFF VALVE

* MINIMUM SANITARY/VENT PIPE SIZE BELOW SLAB IS 2".
** VALUES TAKEN FROM TABLES 709.1 AND E103.3(2) FROM THE CURRENT ADOPTED IPC

NOTES:
1. ALL FIXTURES TO BE BY MANUFACTURER NOTED, OR APPROVED EQUAL, AND SUPPLIED WHITE UNLESS NOTED OR DIRECTED BY ARCHITECT.
2. ALL EXPOSED PIPING, P-TRAPS AND STOP VALVES TO BE CHROME PLATED BRASS.
3. PROVIDE WITH TUREBRO LAV SHIELD UNDERSINK PROTECTION GUARD WITH TAMPER RESISTANT SCREWS FOR ALL WALL MOUNTED LAVATORIES (BOTH HANDICAP AND NON-HANDICAP FIXTURES).
4. PROVIDE STOP VALVES AT EACH FIXTURE.
5. PROVIDE WITH FIAT E-88-AA STAINLESS STEEL BUMPER GUARDS, MSG2424 WALL GUARD CAULKED WITH 833-AA SEALANT, 832-AA HOSE AND BRACKET, AND 889-CC MOP HANGER.
6. PROVIDE WITH SUMP RECEIVER, UNDER DECK CLAMPS, CAST IRON DOME AND EXTENSION COLLARS AS NECESSARY FOR A COMPLETE INSTALLATION.

GAS WATER HEATER SCHEDULE

SYMBOL	FIXTURE TYPE	MANUFACTURER	MODEL NO.	MOUNTING/ SUPPORT	INLET/OUTLET CONNECTIONS					INPUT MBH	ELECTRIC	NOTES
					HW	CW	GAS	INTAKE	EXHAUST			
GWH1	GAS WATER HEATER	PVI	20L 100A-GCL	FLOOR	1-1/2"	1-1/2"	3/4"	3"	3"	199	120V	233 GPH RECOVERY @ 100°F TEMP RISE
GWH2	GAS WATER HEATER	PVI	20L 100A-GCL	FLOOR	1-1/2"	1-1/2"	3/4"	3"	3"	199	120V	233 GPH RECOVERY @ 100°F TEMP RISE

NOTES:
1. INSTALL PER MANUFACTURER'S WRITTEN INSTRUCTIONS.
2. PROVIDE UNIT WITH POWER DIRECT VENTING FOR SEALED COMBUSTION WITH VERTICAL VENT TERMINATION KIT FOR EACH WATER HEATER.
3. PROVIDE WITH ALL NECESSARY VALVES AND FITTINGS FOR A COMPLETE INSTALLATION.
4. PROVIDE WITH T&P VALVE TO DISCHARGE WITH AIR GAP TO FLOOR DRAIN.
5. VENTING TO BE INSTALLED ACCORDING TO MANUFACTURER'S WRITTEN INSTRUCTIONS AND APPLICIABLE FUEL GAS CODE.
6. PROVIDE ENTIRE UNIT TO BE ASME CONSTRUCTION WITH 10 YEAR WARRANTY ON PRESSURE VESSEL AND HEAT EXCHANGER.
7. PROVIDE 2 PSI TO 7" WC GAS REGULATOR
8. PROVIDE ORIFICES FOR PROPANE OPERATION
9. PROVIDE CONDENSATE NEUTRALIZATION KIT

PUMP SCHEDULE

TAG NO.	SERVES	MANUFACTURER	MODEL NO.	TYPE	G.P.M.	FT. HD.	WATTS	V/P/Hz	REMARKS
P-1	HWR CIRCULATOR	BELL & GOSSETT	6050B2004LF	INLINE	7	15	60	120V/1□	1,2

REMARKS:
1. PUMP HOUSINGS TO BE STAINLESS STEEL CONSTRUCTION.
2. DISCONNECT BY EC.

Professional Certification. I hereby certify that these documents were prepared or approved by me, and that I am a duly licensed professional engineer under the laws of the State of Maryland. License No. 49693, Expiration Date: 2020-07-24.

STATE OF MARYLAND
KATHRYN PARFITT
49693
PROFESSIONAL ENGINEER

ALL REPORTS, PLANS SPECIFICATIONS AND COMPUTER FILES RELATING TO THIS PROJECT ARE THE PROPERTY OF CRABTREE, ROHRBAUGH & ASSOCIATES. CRABTREE ROHRBAUGH & ASSOCIATES RETAINS ALL COMMON LAW, STATUTE AND OTHER RESERVED RIGHTS INCLUDING THE COPYRIGHT THERETO. REPRODUCTION OF THE MATERIAL HERIN OR SUBSTANTIAL USE WITHOUT WRITTEN PERMISSION OF CRABTREE, ROHRBAUGH & ASSOCIATES VIOLATES THE COPYRIGHT LAWS OF THE UNITED STATES AND WILL BE SUBJECT TO LEGAL PROSECUTION.
© CRABTREE, ROHRBAUGH & ASSOCIATES, INC 2019

REVISIONS

#	MM-DD-YR	NAME	DESCRIPTION OF CHANGES

CRABTREE ROHRBAUGH & ASSOCIATES - ARCHITECTS
100 WEST ROAD, SUITE 402, TOWSON MD 21204 410-528-0272
www.cra-architects.com
MECHANICSBURG, PENNSYLVANIA CHARLOTTESVILLE, VIRGINIA WHITE SULPHUR SPRINGS, WEST VIRGINIA

PROPOSED NEW
WASHINGTON COUNTY PUBLIC SAFETY TRAINING CENTER
WASHINGTON COUNTY PROJECT NO. 28-266
18350 PUBLIC SAFETY PLACE
HAGERSTOWN, MD 21740

PLUMBING SCHEDULES

PLOT SCALE:

FILENAME:

DATE: December 18, 2019

PROJECT
3089

P5.0